LCFC Confidential

DG421/DG521/DG721 MB Schematics Document

Kabylake-U22 with DDR4 + Nvidia N16S-GTR/N16V-GMR1 GPU

2017-01-18

REV:1.0

Vinafix.com

Security Classification	LC Future Center Secret Data		
Issued Date	2015/08/20	Deciphered Date	2016/08/20

THIS SHEET OF ENGINEERING DRAWING IS THE PROPRIETARY PROPERTY OF LC FUTURE CENTER, AND CONTAINS CONFIDENTIAL AND TRADE SECRET INFORMATION. THIS SHEET MAY NOT BE TRANSFERED FROM THE CUSTODY OF THE COMPETENT DIVISION OF R&D DEPARTMENT EXCEPT AS AUTHORIZED BY LC FUTURE CENTER NEITHER THIS SHEET NOR THE INFORMATION IT CONTAINS MAY BE USED BY OR DISCLOSED TO ANY THIRD PARTY WITHOUT PRIOR WRITTEN CONSENT OF LC FUTURE CENTER.

Title: Cover Page

Size	Document Number	Rev
Custom	DG421	1.0

Date: Sunday, January 22, 2017 | Sheet 1 of 60

LCFC confidential

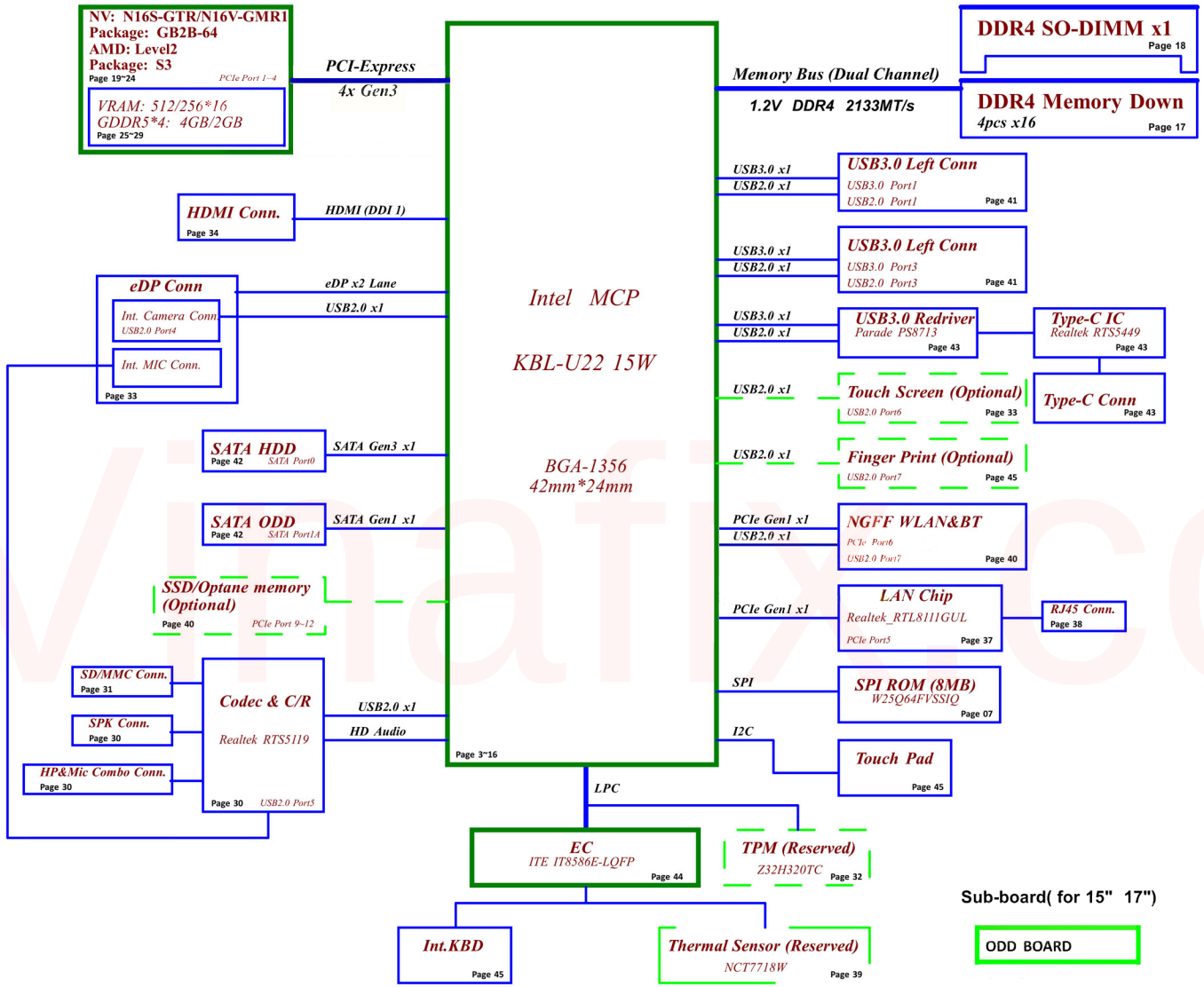

Security Classification	LC Future Center Secret Data		
Issued Date	2015/08/20	Deciphered Date	2016/08/20

THIS SHEET OF ENGINEERING DRAWING IS THE PROPRIETARY PROPERTY OF LC FUTURE CENTER, AND CONTAINS CONFIDENTIAL AND TRADE SECRET INFORMATION. THIS SHEET MAY NOT BE TRANSFERED FROM THE CUSTODY OF THE COMPETENT DIVISION OF R&D DEPARTMENT EXCEPT AS AUTHORIZED BY LC FUTURE CENTER NEITHER THIS SHEET NOR THE INFORMATION IT CONTAINS MAY BE USED BY OR DISCLOSED TO ANY THIRD PARTY WITHOUT PRIOR WRITTEN CONSENT OF LC FUTURE CENTER.

Title: Block Diagram

Size: Custom | Document Number: DG421 | Rev: 1.0

Date: Sunday, January 22, 2017 | Sheet 2 of 60

Vinafix.com

Voltage Rails (O --> Means ON , X --> Means OFF)

Power Plane / State	V20B+	+3VALW +5VALW +3VALW_PCH +1.8VALW +1.0VALW	+1.2V +2.5V_DDR +VCCST	+5VS +3VS +VCCIO +VCCSTG +VCCSA +VCC_GT +CPU_CORE +0.6VS
S0	O	O	O	O
S3	O	O	O	X
S3 Battery only	O	O	O	X
S5 S4 AC Only	O	O	X	X
S5 S4 Battery only	O	X	X	X
S5 S4 AC & Battery don't exist	X	X	X	X

STATE \ SIGNAL		SLP_S3#	SLP_S4#	SLP_S5#	+VALW	+V	+VS	Clock
Full ON		HIGH	HIGH	HIGH	ON	ON	ON	ON
S3 (Suspend to RAM)		LOW	HIGH	HIGH	ON	ON	OFF	OFF
S4 (Suspend to Disk)		LOW	LOW	LOW	ON	OFF	OFF	OFF
S5 (Soft OFF)		LOW	LOW	LOW	ON	OFF	OFF	OFF

SMBUS Control Table

	SOURCE	BATT	Charger	DGPU	IT8586E	Memory Down	PCH	PMIC	SODIMM	Thermal Sensor	WLAN WiMAX
EC_SMB_CK1 EC_SMB_DA1	IT8586E +3VL_EC	V	V	X	V +3VL_EC	X	X	X	X	X	X
EC_SMB_CK2 EC_SMB_DA2	IT8586E +3VS	X	X	V +3VG_AON	V +3VS	X	V +3VALW_PCH	X	X	V	X
EC_SMB_CK3 EC_SMB_DA3	IT8586E +3VL_EC	X	X	X	V +3VL_EC	X	X	V	X	X	X
PCH_SMB_CLK PCH_SMB_DATA	PCH +3VALW_PCH	X	X	X	X	X	V +3VALW_PCH	X	V +3VS	X	V +3VS

HSIO PORT		Function
USB3.0	1	USB3.0 Conn Left
	2	USB Type-C
	3	USB3.0 Conn Left
	4	NC
	5	NC
	6	NC
USB2.0	1	USB3.0 Conn Left
	2	USB Type-C
	3	USB3.0 Conn Left
	4	Finger Print
	5	Cardreader
	6	Touch Panel
	7	Bluetooth
	8	Camera
	9	NC
	10	NC
PCIE	1~4 X4 PCIE	DGPU
	5	LAN
	6	WLAN
	7	SATA HDD
	8	SATA ODD
	9~12 X4 PCIE	Optane Memory
SATA	0	HDD
	1A	ODD
	1B	used as PCIE
	2	used as PCIE

BOM Structure	BTO Item
@	Not stuff
14@	For 14" part
15@	For 15" part
14or15@	For 14" or 15" part
14or17@	For 14" or 17" part
Cannonlake@	For Cannonlake part
CD@	For C cost down
DUALMIC@	For Dual MIC part
EMC@	For EMC part
EMC_15@	For EMC 15" part
EMC_NS@	For EMC nu-stuff part
EMC_PX@	For EMC PX part
EMC_PXNS@	For EMC PX nu-stuff part
ES@	For ES CPU
EXO@	For EXO GPU
ME@	For ME part
NTS@	For nu-touch part
DIS@	For GPU part
OPT@	For NV GPU part
PX@	For AMD GPU part
RANKA@	For VRAM rank A part
RANKB@	For VRAM rank B part
Realtek_SD@	For Realtek SD part
SINGLEMIC@	For single MIC part
SINGLERANK@	For single VRAN rank part
DUALRANK@	For dual VRAN rank part
TS@	For touch screen part
TPM@	For TPM part
UMA@	For UMA part

EC SMBus1 address

Device	Address
Smart Battery	need to update
Charger	0001 0010 b

EC SMBus2 address

Device	Address
Thermal Sensor(NCT7718W)	1001_100xb
PCH	need to update
DGPU	need to update

EC SMBus3 address

Device	Address
PMIC	need to update

PCH SM Bus address

Device	Address
DDR4 SODIMM	need to update
Wlan	Reserved

Security Classification	LC Future Center Secret Data		
Issued Date	2015/08/20	Deciphered Date	2016/08/20

THIS SHEET OF ENGINEERING DRAWING IS THE PROPRIETARY PROPERTY OF LC FUTURE CENTER, AND CONTAINS CONFIDENTIAL AND TRADE SECRET INFORMATION. THIS SHEET MAY NOT BE TRANSFERED FROM THE CUSTODY OF THE COMPETENT DIVISION OF R&D DEPARTMENT EXCEPT AS AUTHORIZED BY LC FUTURE CENTER NEITHER THIS SHEET NOR THE INFORMATION IT CONTAINS MAY BE USED BY OR DISCLOSED TO ANY THIRD PARTY WITHOUT PRIOR WRITTEN CONSENT OF LC FUTURE CENTER.

Title: **Notes List**

Size: Custom | Document Number: DG421 | Rev 1.0

Date: Sunday, January 22, 2017 | Sheet 3 of 60

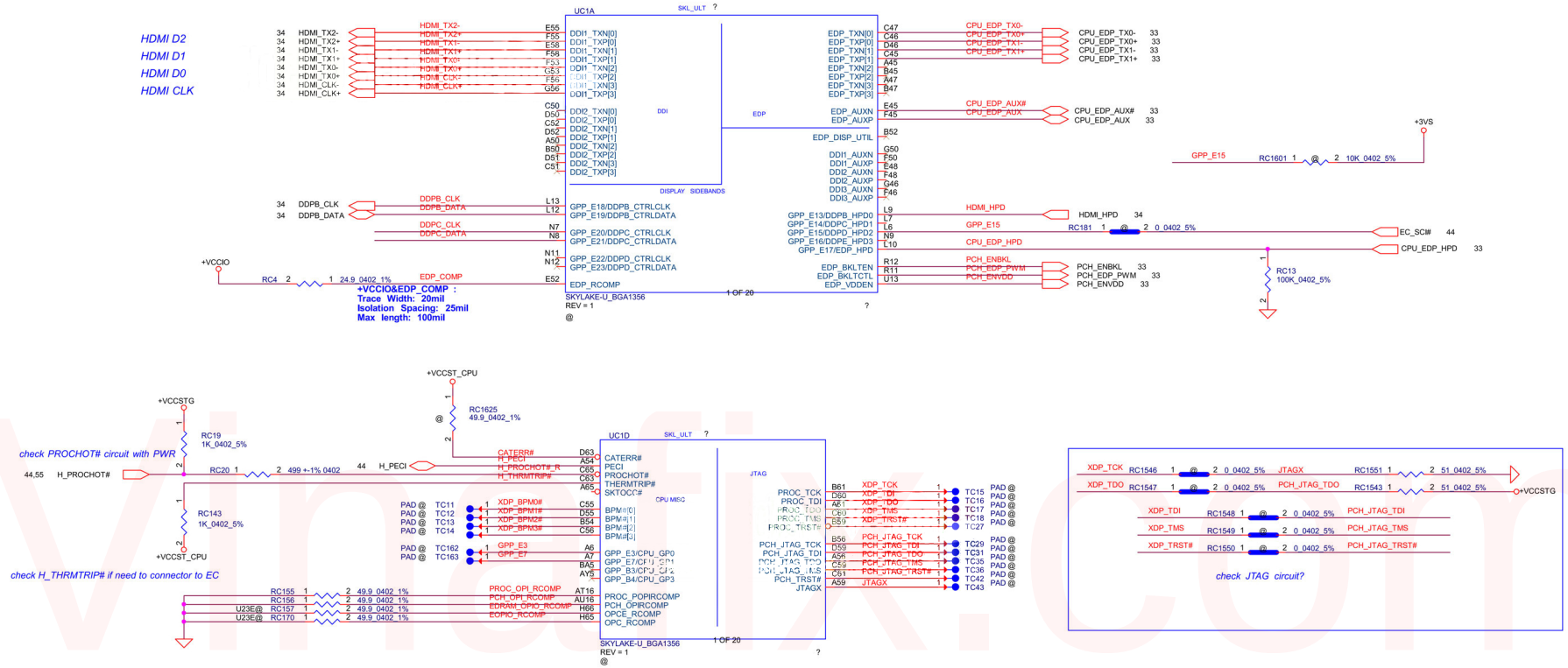

DDP*_CTRLDATA strapping sampled on the rising edge of PWROK

Port	Strap	Enable	Disable
Port 1	DDPB_CTRLDATA	Pull up to 3.3 V with 2.2Kohm	NC
Port 2	DDPC_CTRLDATA	Pull up to 3.3 V with 2.2Kohm	NC

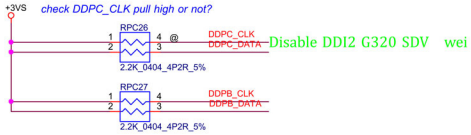

Security Classification	LC Future Center Secret Data		
Issued Date	2015/08/20	Deciphered Date	2016/08/20

THIS SHEET OF ENGINEERING DRAWING IS THE PROPRIETARY PROPERTY OF LC FUTURE CENTER, AND CONTAINS CONFIDENTIAL AND TRADE SECRET INFORMATION. THIS SHEET MAY NOT BE TRANSFERED FROM THE CUSTODY OF THE COMPETENT DIVISION OF R&D DEPARTMENT EXCEPT AS AUTHORIZED BY LC FUTURE CENTER NEITHER THIS SHEET NOR THE INFORMATION IT CONTAINS MAY BE USED BY OR DISCLOSED TO ANY THIRD PARTY WITHOUT PRIOR WRITTEN CONSENT OF LC FUTURE CENTER.

Title: **MCP (DDI,EDP)**

Size: Custom | Document Number: **DG421** | Rev: 1.0

Date: Sunday, January 22, 2017 | Sheet 4 of 60

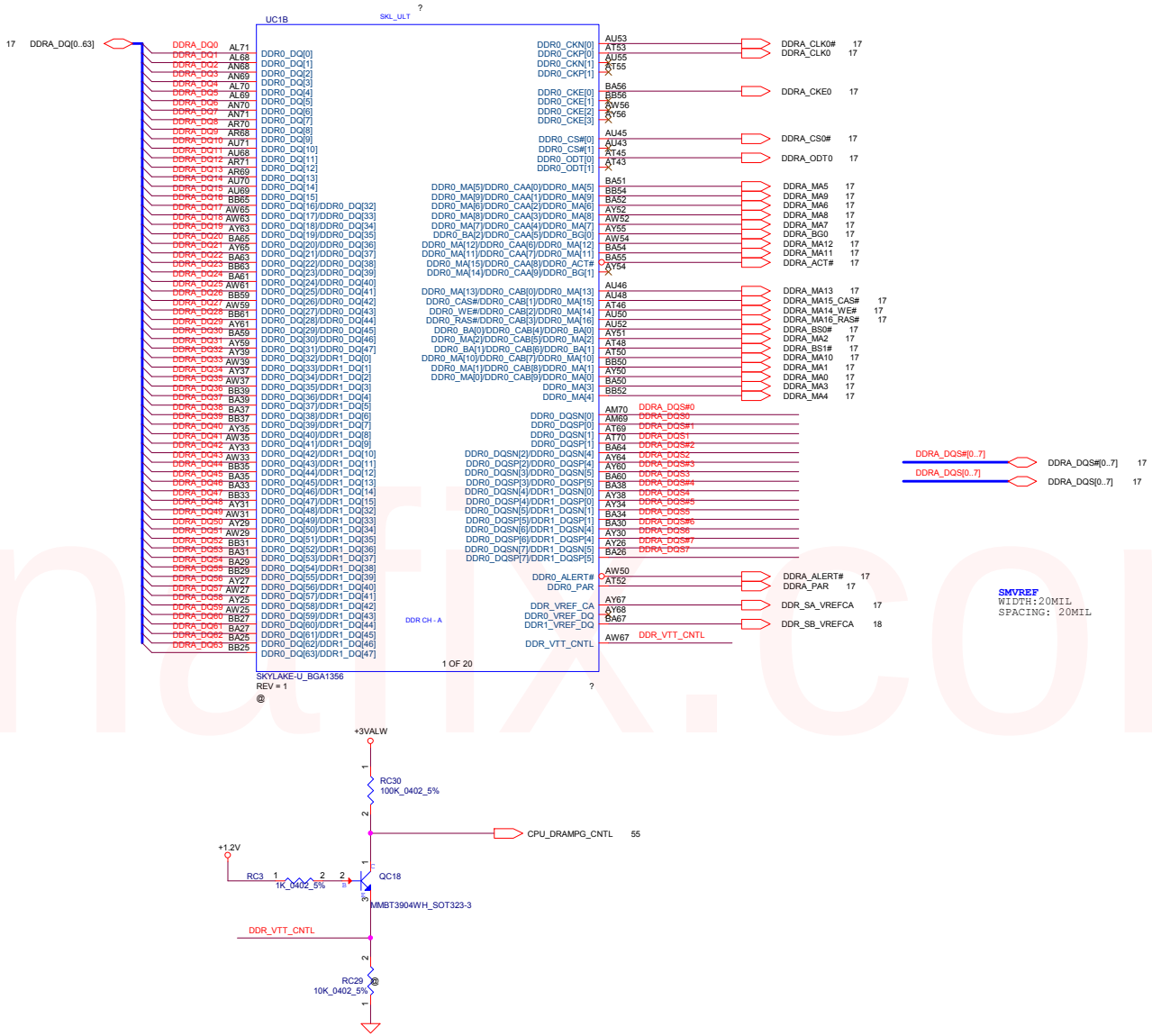

Security Classification	LC Future Center Secret Data		
Issued Date	2015/08/20	Deciphered Date	2016/08/20

THIS SHEET OF ENGINEERING DRAWING IS THE PROPRIETARY PROPERTY OF LC FUTURE CENTER, AND CONTAINS CONFIDENTIAL AND TRADE SECRET INFORMATION. THIS SHEET MAY NOT BE TRANSFERED FROM THE CUSTODY OF THE COMPETENT DIVISION OF R&D DEPARTMENT EXCEPT AS AUTHORIZED BY LC FUTURE CENTER NEITHER THIS SHEET NOR THE INFORMATION IT CONTAINS MAY BE USED BY OR DISCLOSED TO ANY THIRD PARTY WITHOUT PRIOR WRITTEN CONSENT OF LC FUTURE CENTER.

Title: **MCP (DDR4)**

Size	Document Number	Rev
Custom	DG421	1.0

Date: Sunday, January 22, 2017 | Sheet 5 of 60

Vinafix.com

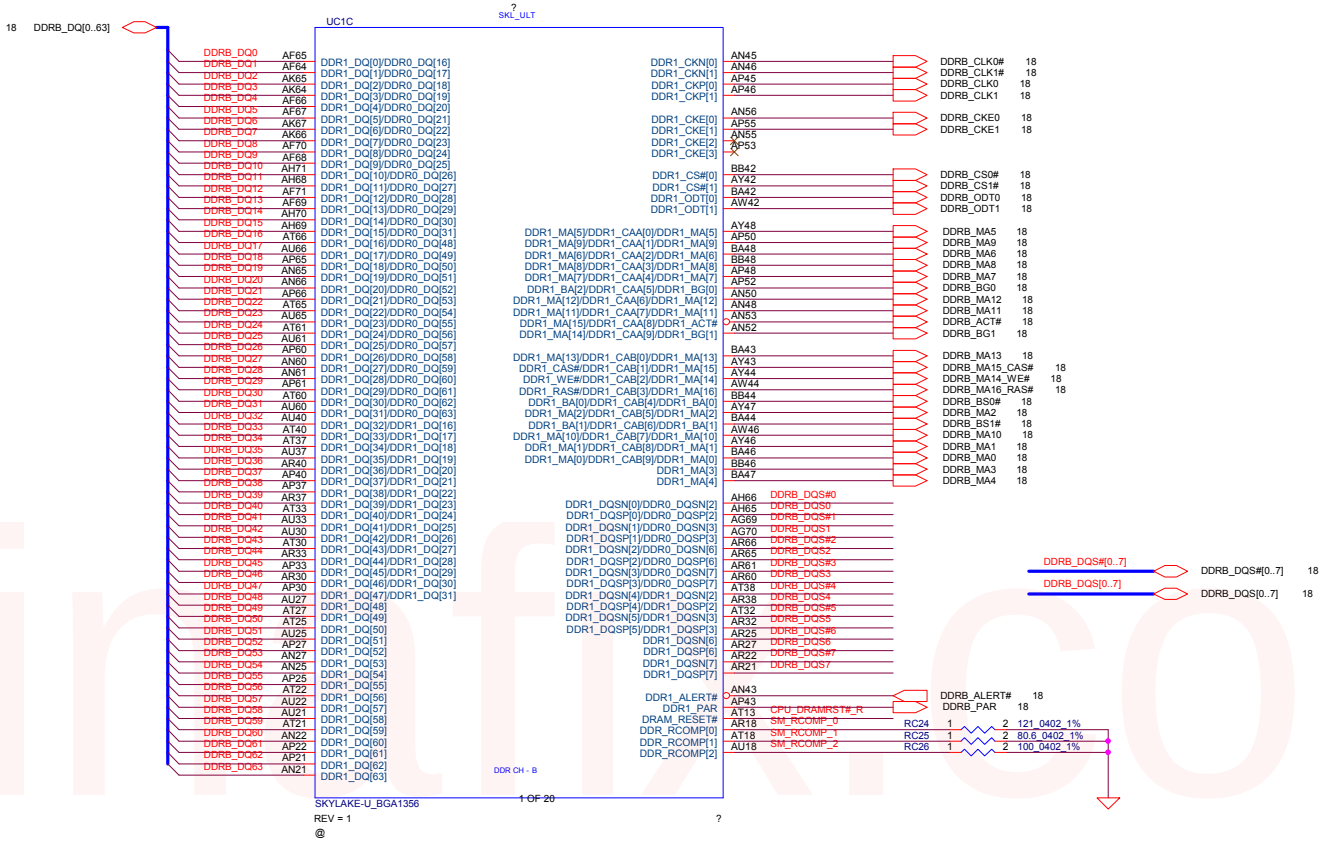

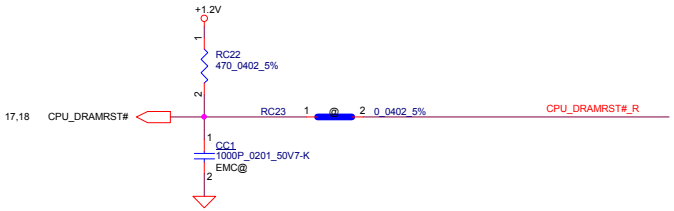

Vinafix.com

Security Classification	LC Future Center Secret Data		
Issued Date	2015/08/20	Deciphered Date	2016/08/20

THIS SHEET OF ENGINEERING DRAWING IS THE PROPRIETARY PROPERTY OF LC FUTURE CENTER. AND CONTAINS CONFIDENTIAL AND TRADE SECRET INFORMATION. THIS SHEET MAY NOT BE TRANSFERED FROM THE CUSTODY OF THE COMPETENT DIVISION OF R&D DEPARTMENT EXCEPT AS AUTHORIZED BY LC FUTURE CENTER NEITHER THIS SHEET NOR THE INFORMATION IT CONTAINS MAY BE USED BY OR DISCLOSED TO ANY THIRD PARTY WITHOUT PRIOR WRITTEN CONSENT OF LC FUTURE CENTER.

Title: **MCP (DDR4)**

Size: Custom | Document Number: DG421 | Rev: 1.0

Date: Sunday, January 22, 2017 | Sheet 6 of 60

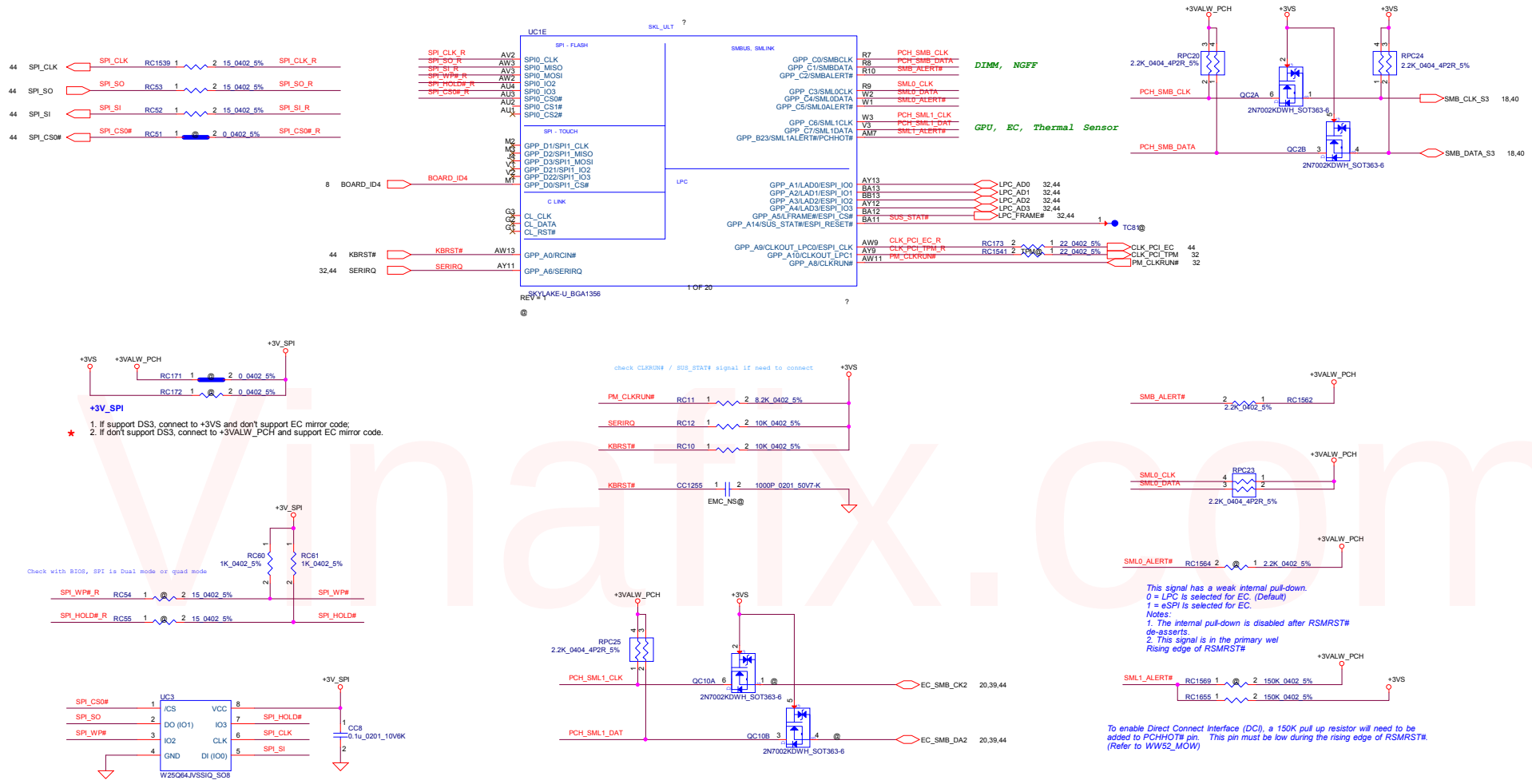

Security Classification	LC Future Center Secret Data		
Issued Date	2015/08/20	Deciphered Date	2016/08/20

THIS SHEET OF ENGINEERING DRAWING IS THE PROPRIETARY PROPERTY OF LC FUTURE CENTER, AND CONTAINS CONFIDENTIAL AND TRADE SECRET INFORMATION. THIS SHEET MAY NOT BE TRANSFERED FROM THE CUSTODY OF THE COMPETENT DIVISION OF R&D DEPARTMENT EXCEPT AS AUTHORIZED BY LC FUTURE CENTER NEITHER THIS SHEET NOR THE INFORMATION IT CONTAINS MAY BE USED BY OR DISCLOSED TO ANY THIRD PARTY WITHOUT PRIOR WRITTEN CONSENT OF LC FUTURE CENTER.

Title: MCP (MISC,JTAG,SPI,LPC,

Size: C | Document Number: DG421 | Rev: 1.0

Date: Sunday, January 22, 2017 | Sheet 7 of 60

vinafix.com

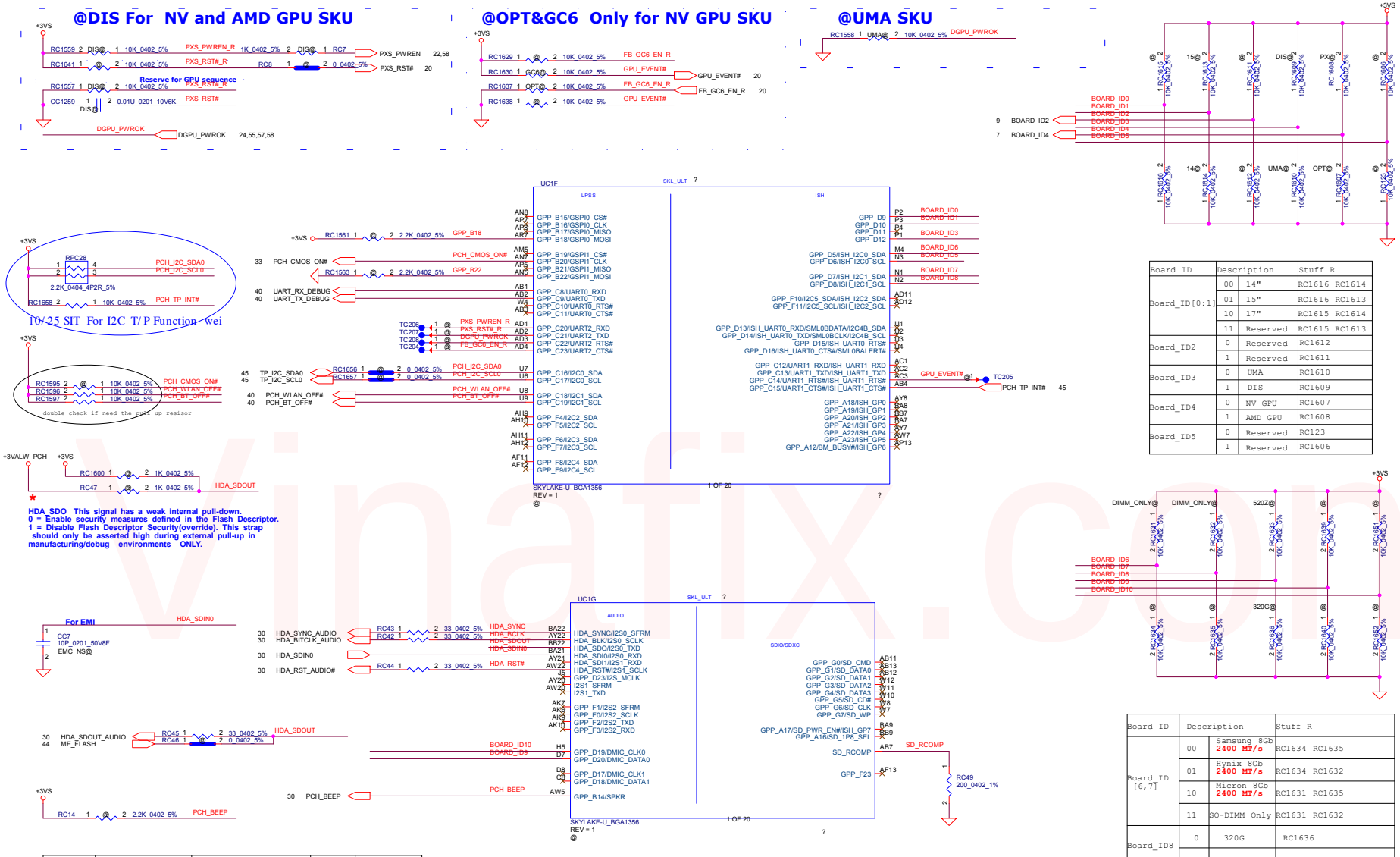

Board ID	Description		Stuff R
Board_ID[0:1]	00	14"	RC1616 RC1614
	01	15"	RC1616 RC1613
	10	17"	RC1615 RC1614
	11	Reserved	RC1615 RC1613
Board_ID2	0	Reserved	RC1612
	1	Reserved	RC1611
Board_ID3	0	UMA	RC1610
	1	DIS	RC1609
Board_ID4	0	NV GPU	RC1607
	1	AMD GPU	RC1608
Board_ID5	0	Reserved	RC123
	1	Reserved	RC1606

Board ID	Description		Stuff R
Board_ID [6,7]	00	Samsung 8Gb 2400 MT/s	RC1634 RC1635
	01	Hynix 8Gb 2400 MT/s	RC1634 RC1632
	10	Micron 8Gb 2400 MT/s	RC1631 RC1635
	11	SO-DIMM Only	RC1631 RC1632
Board_ID8	0	320G	RC1636
	1	520Z	RC1633
Board_ID9	0	Reserved	RC1640
	1	Reserved	RC1639
Board_ID10	0	Reserved	RC1652
	1	Reserved	RC1651

Pin Name	Strap Description	Configuration	Default Value	When Sampled
SPKR / GPP_B14	Top Swap Override	Internal PD 0 = Disable " Top Swap" mode. (Default) ★ 1 = Enable " Top Swap" mode.	0	Rising edge of PCH_PWROK
GSPI0_MOSI /GPP_B18	No Reboot	Internal PD 0 = Disable " No Reboot" mode. (Default) ★ 1 = Enable " No Reboot" mode	0	Rising edge of PCH_PWROK
GSPI1_MOSI /GPP_B22	Boot BIOS Strap Bit BBS	Internal PD 0 = SPI (Default) ★ 1 = LPC	0	Rising edge of PCH_PWROK

vinafix.com

Security Classification	LC Future Center Secret Data		
Issued Date	2015/08/20	Deciphered Date	2016/08/20

THIS SHEET OF ENGINEERING DRAWING IS THE PROPRIETARY PROPERTY OF LC FUTURE CENTER, AND CONTAINS CONFIDENTIAL AND TRADE SECRET INFORMATION. THIS SHEET MAY NOT BE TRANSFERED FROM THE CUSTODY OF THE COMPETENT DIVISION OF R&D DEPARTMENT EXCEPT AS AUTHORIZED BY LC FUTURE CENTER NEITHER THIS SHEET NOR THE INFORMATION IT CONTAINS MAY BE USED BY OR DISCLOSED TO ANY THIRD PARTY WITHOUT PRIOR WRITTEN CONSENT OF LC FUTURE CENTER.

Title: MCP (LPSS,ISH,AUDIO,SDI

Size: C | Document Number: DG421 | Rev: 1.0

Date: Sunday, January 22, 2017 | Sheet 8 of 60

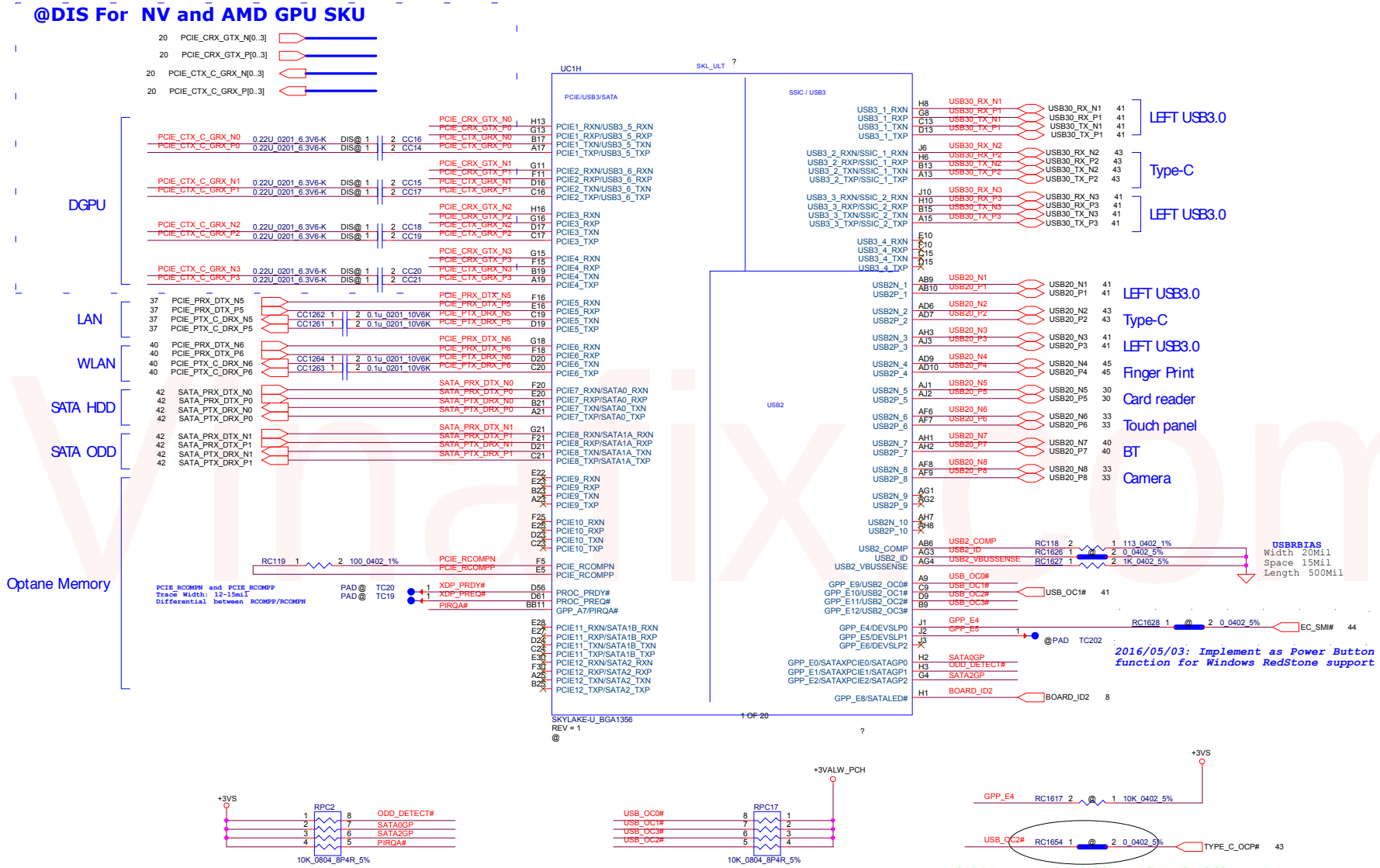

Security Classification	LC Future Center Secret Data		
Issued Date	2015/08/20	Deciphered Date	2016/08/20

THIS SHEET OF ENGINEERING DRAWING IS THE PROPRIETARY PROPERTY OF LC FUTURE CENTER. AND CONTAINS CONFIDENTIAL AND TRADE SECRET INFORMATION. THIS SHEET MAY NOT BE TRANSFERED FROM THE CUSTODY OF THE COMPETENT DIVISION OF R&D DEPARTMENT EXCEPT AS AUTHORIZED BY LC FUTURE CENTER NEITHER THIS SHEET NOR THE INFORMATION IT CONTAINS MAY BE USED BY OR DISCLOSED TO ANY THIRD PARTY WITHOUT PRIOR WRITTEN CONSENT OF LC FUTURE CENTER.

Title: MCP (PCIE,SATA,USB3,US

Size: Custom | Document Number: DG421 | Rev: 1.0

Date: Sunday, January 22, 2017 | Sheet 9 of 60

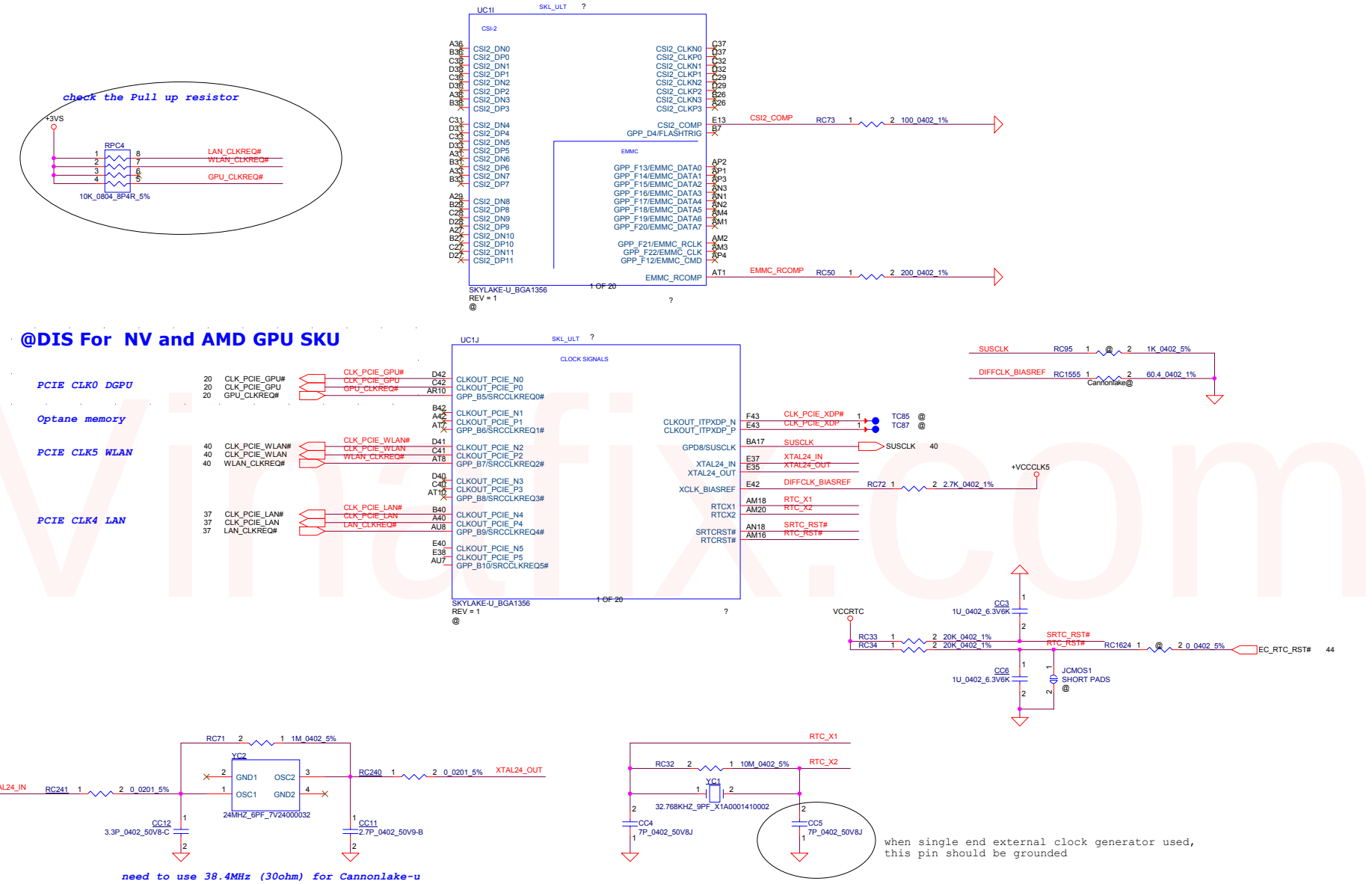

Security Classification	LC Future Center Secret Data		
Issued Date	2015/08/20	Deciphered Date	2016/08/20

THIS SHEET OF ENGINEERING DRAWING IS THE PROPRIETARY PROPERTY OF LC FUTURE CENTER. AND CONTAINS CONFIDENTIAL AND TRADE SECRET INFORMATION. THIS SHEET MAY NOT BE TRANSFERED FROM THE CUSTODY OF THE COMPETENT DIVISION OF R&D DEPARTMENT EXCEPT AS AUTHORIZED BY LC FUTURE CENTER NEITHER THIS SHEET NOR THE INFORMATION IT CONTAINS MAY BE USED BY OR DISCLOSED TO ANY THIRD PARTY WITHOUT PRIOR WRITTEN CONSENT OF LC FUTURE CENTER.

Title: MCP (CSI2,EMMC,CLOCK)

Size: Custom | Document Number: DG421 | Rev: 1.0

Date: Sunday, January 22, 2017 | Sheet 10 of 60

Vinafix.com

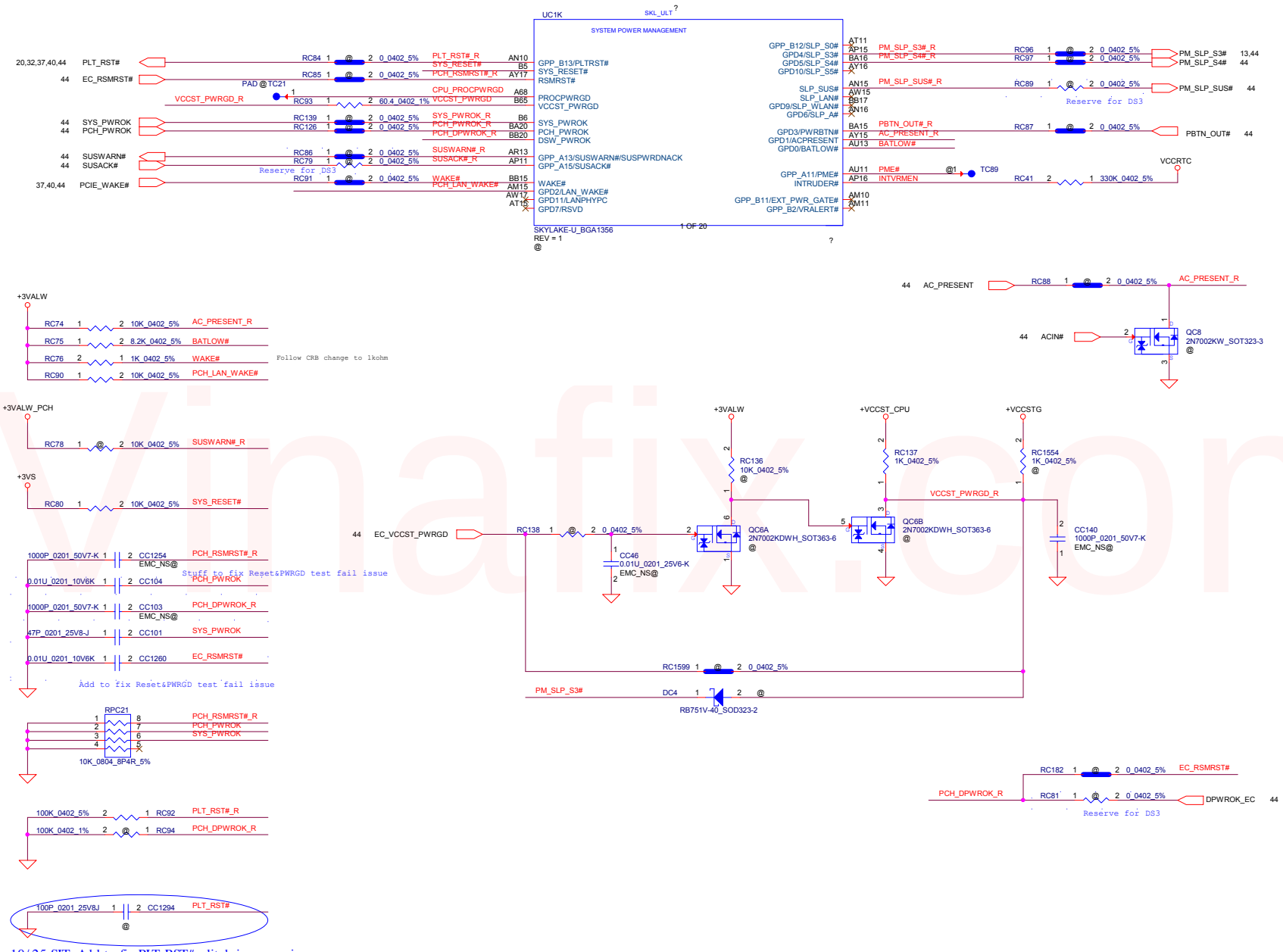

Security Classification	LC Future Center Secret Data		
Issued Date	2015/08/20	Deciphered Date	2016/08/20

THIS SHEET OF ENGINEERING DRAWING IS THE PROPRIETARY PROPERTY OF LC FUTURE CENTER. AND CONTAINS CONFIDENTIAL AND TRADE SECRET INFORMATION. THIS SHEET MAY NOT BE TRANSFERED FROM THE CUSTODY OF THE COMPETENT DIVISION OF R&D DEPARTMENT EXCEPT AS AUTHORIZED BY LC FUTURE CENTER NEITHER THIS SHEET NOR THE INFORMATION IT CONTAINS MAY BE USED BY OR DISCLOSED TO ANY THIRD PARTY WITHOUT PRIOR WRITTEN CONSENT OF LC FUTURE CENTER.

Title: MCP (SYSTEM PWR MANAGEMENT)

Size: Custom | Document Number: DG421 | Rev: 1.0

Date: Sunday, January 22, 2017 | Sheet 11 of 60

vinafix.com

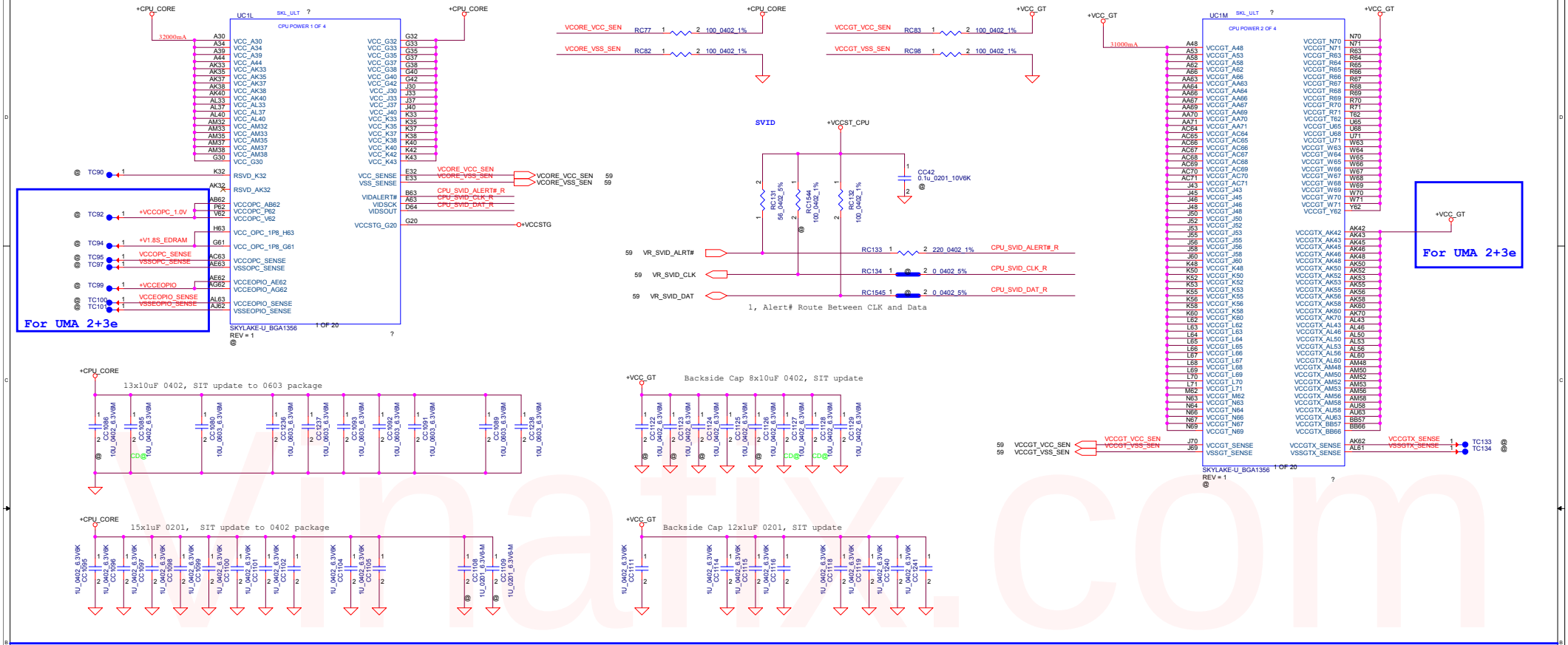

Security Classification	LC Future Center Secret Data		
Issued Date	2015/08/20	Deciphered Date	2016/08/20

THIS SHEET OF ENGINEERING DRAWING IS THE PROPRIETARY PROPERTY OF LC FUTURE CENTER. AND CONTAINS CONFIDENTIAL AND TRADE SECRET INFORMATION. THIS SHEET MAY NOT BE TRANSFERED FROM THE CUSTODY OF THE COMPETENT DIVISION OF R&D DEPARTMENT EXCEPT AS AUTHORIZED BY LC FUTURE CENTER NEITHER THIS SHEET NOR THE INFORMATION IT CONTAINS MAY BE USED BY OR DISCLOSED TO ANY THIRD PARTY WITHOUT PRIOR WRITTEN CONSENT OF LC FUTURE CENTER.

Title: **MCP (CPU PWR1)**

Size: Custom | Document Number: **DG421** | Rev: 1.0

Date: Sunday, January 22, 2017 | Sheet 12 of 60

Vinafix.com

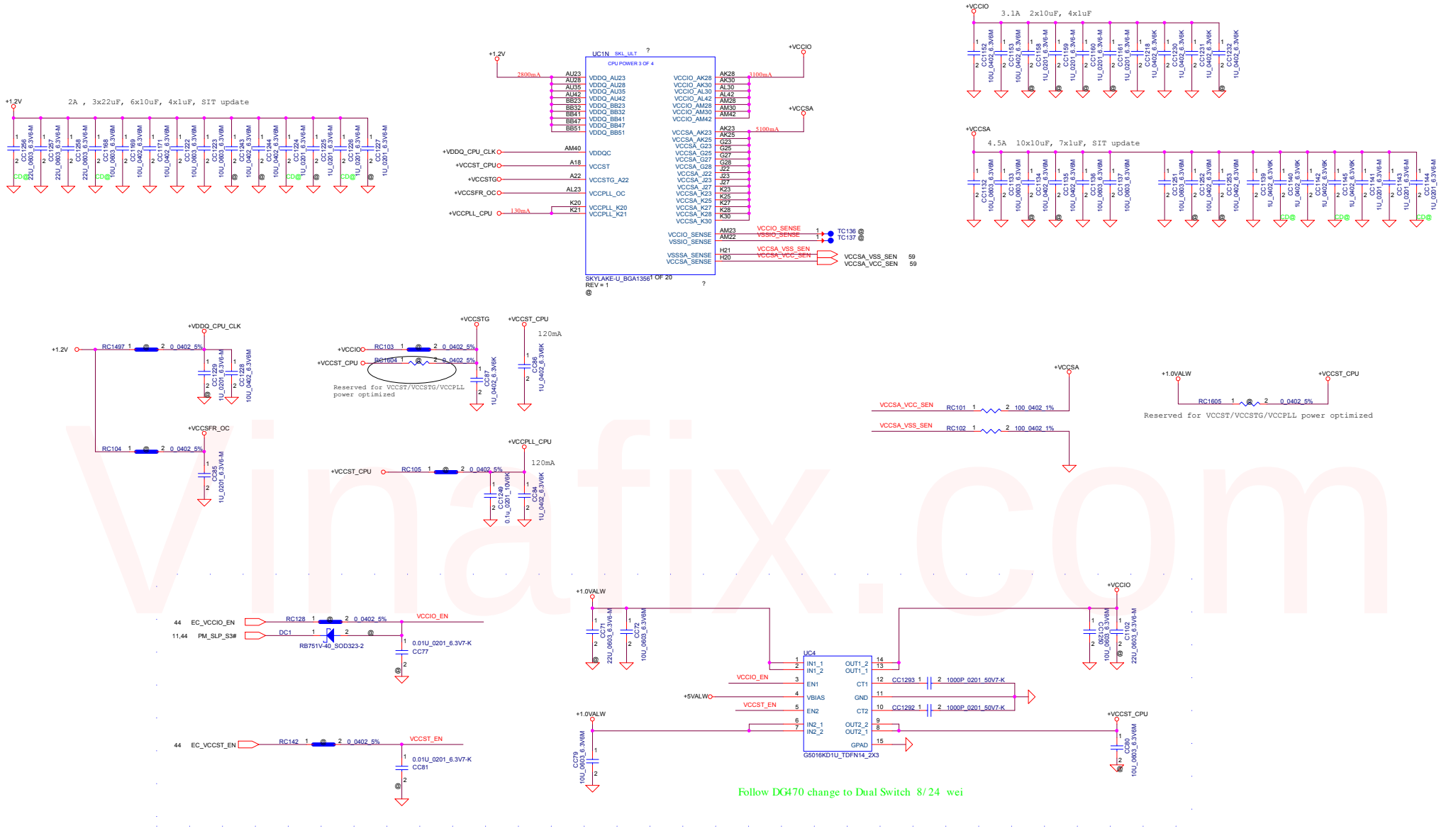

Security Classification	LC Future Center Secret Data		
Issued Date	2015/08/20	Deciphered Date	2016/08/20

THIS SHEET OF ENGINEERING DRAWING IS THE PROPRIETARY PROPERTY OF LC FUTURE CENTER. AND CONTAINS CONFIDENTIAL AND TRADE SECRET INFORMATION. THIS SHEET MAY NOT BE TRANSFERED FROM THE CUSTODY OF THE COMPETENT DIVISION OF R&D DEPARTMENT EXCEPT AS AUTHORIZED BY LC FUTURE CENTER. NEITHER THIS SHEET NOR THE INFORMATION IT CONTAINS MAY BE USED BY OR DISCLOSED TO ANY THIRD PARTY WITHOUT PRIOR WRITTEN CONSENT OF LC FUTURE CENTER.

Title: **MCP (CPU PWR2)**

Size: Custom | Document Number: **DG421** | Rev: 1.0

Date: Sunday, January 22, 2017 | Sheet 13 of 60

Vinafix.com

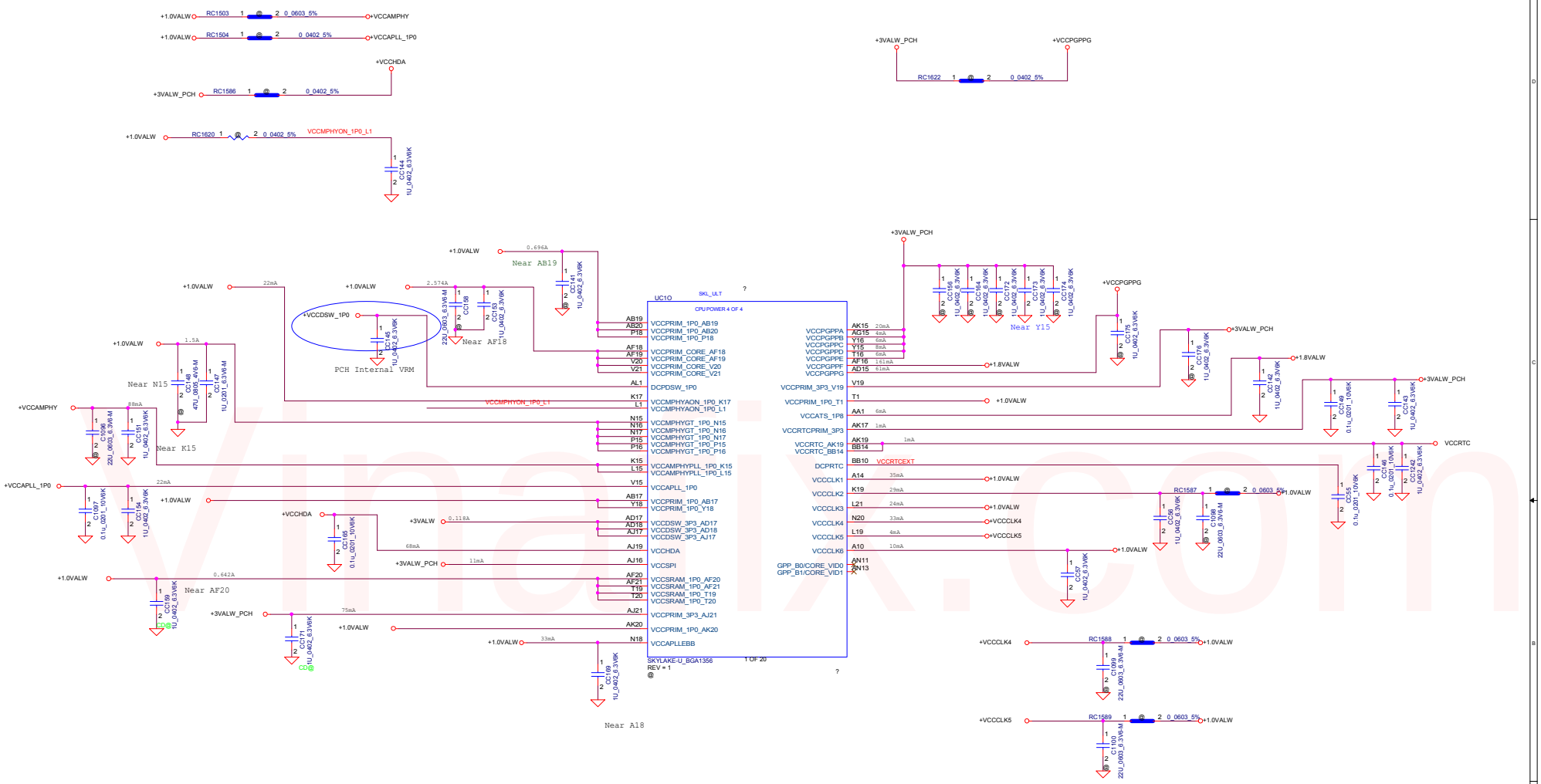

Vinafix.com

Security Classification	LC Future Center Secret Data		
Issued Date	2015/08/20	Deciphered Date	2016/08/20

THIS SHEET OF ENGINEERING DRAWING IS THE PROPRIETARY PROPERTY OF LC FUTURE CENTER, AND CONTAINS CONFIDENTIAL AND TRADE SECRET INFORMATION. THIS SHEET MAY NOT BE TRANSFERRED FROM THE CUSTODY OF THE COMPETENT DIVISION OF R&D DEPARTMENT EXCEPT AS AUTHORIZED BY LC FUTURE CENTER NEITHER THIS SHEET NOR THE INFORMATION IT CONTAINS MAY BE USED BY OR DISCLOSED TO ANY THIRD PARTY WITHOUT PRIOR WRITTEN CONSENT OF LC FUTURE CENTER.

Title: MCP (PCH PWR)

Size: Custom | Document Number: DG421 | Rev: 1.0

Date: Sunday, January 22, 2017 | Sheet 14 of 60

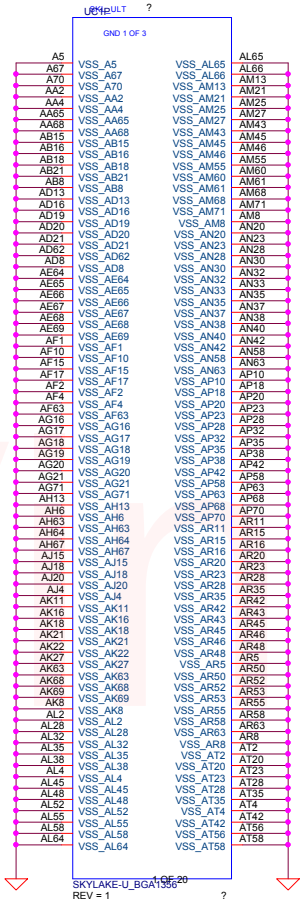

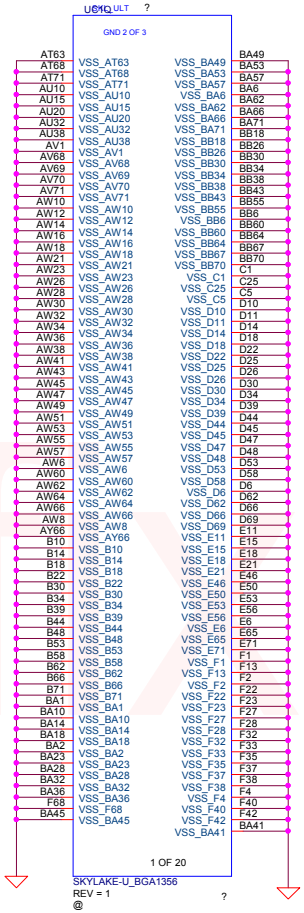

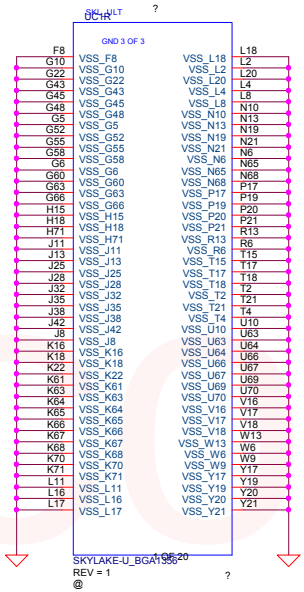

Security Classification	LC Future Center Secret Data		
Issued Date	2015/08/20	Deciphered Date	2016/08/20

THIS SHEET OF ENGINEERING DRAWING IS THE PROPRIETARY PROPERTY OF LC FUTURE CENTER. AND CONTAINS CONFIDENTIAL AND TRADE SECRET INFORMATION. THIS SHEET MAY NOT BE TRANSFERRED FROM THE CUSTODY OF THE COMPETENT DIVISION OF R&D DEPARTMENT EXCEPT AS AUTHORIZED BY LC FUTURE CENTER NEITHER THIS SHEET NOR THE INFORMATION IT CONTAINS MAY BE USED BY OR DISCLOSED TO ANY THIRD PARTY WITHOUT PRIOR WRITTEN CONSENT OF LC FUTURE CENTER.

Title

MCP (VSS)

Size	Document Number	Rev
Custom	DG421	1.0

Date: Sunday, January 22, 2017 | Sheet 15 of 60

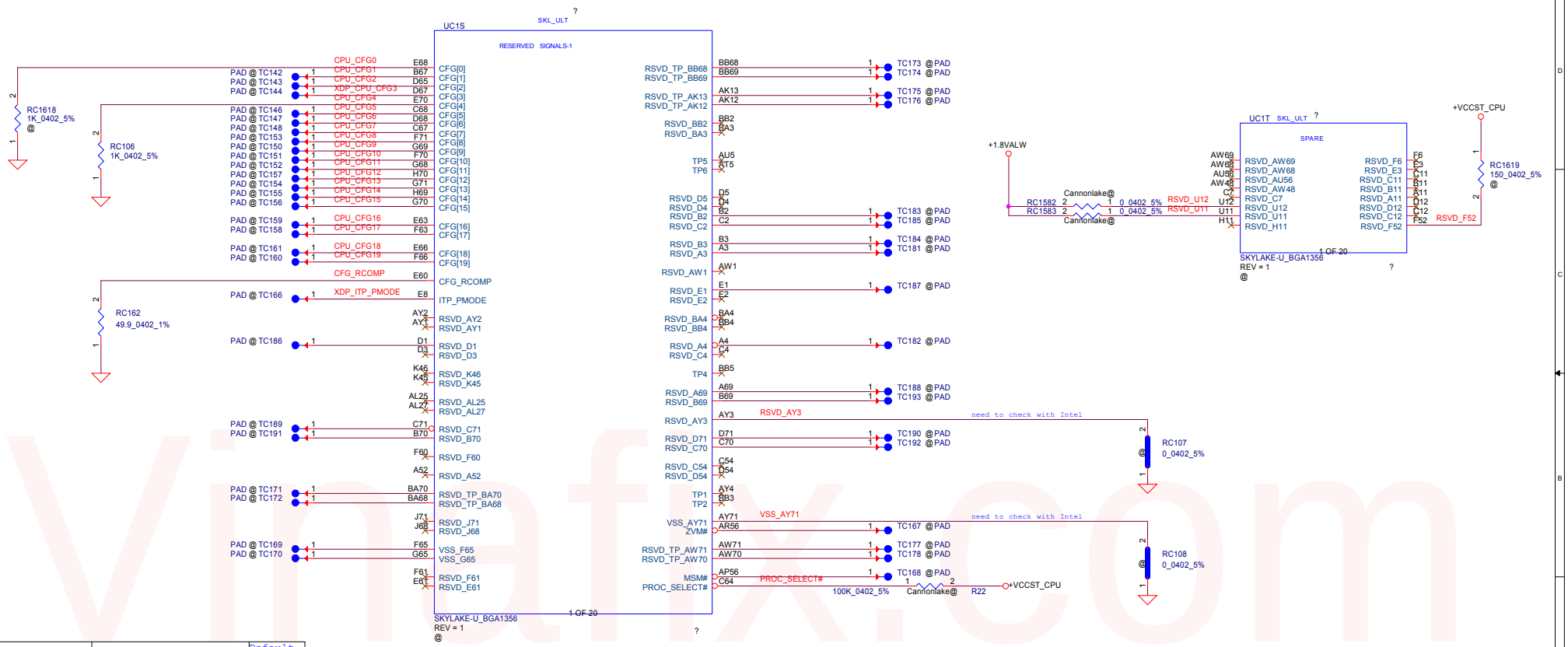

Pin Name	Strap Description	Configuration	Default Value
CFG[4]	Display Port Presence strap	– 1 = eDP Disabled – 0 = eDP Enabled ★	1

Security Classification	LC Future Center Secret Data		
Issued Date	2015/08/20	Deciphered Date	2016/08/20

THIS SHEET OF ENGINEERING DRAWING IS THE PROPRIETARY PROPERTY OF LC FUTURE CENTER. AND CONTAINS CONFIDENTIAL AND TRADE SECRET INFORMATION. THIS SHEET MAY NOT BE TRANSFERED FROM THE CUSTODY OF THE COMPETENT DIVISION OF R&D DEPARTMENT EXCEPT AS AUTHORIZED BY LC FUTURE CENTER NEITHER THIS SHEET NOR THE INFORMATION IT CONTAINS MAY BE USED BY OR DISCLOSED TO ANY THIRD PARTY WITHOUT PRIOR WRITTEN CONSENT OF LC FUTURE CENTER.

Title: **MCP (CFG,RESERVED)**

Size: Custom | Document Number: **DG421** | Rev: 1.0

Date: Sunday, January 22, 2017 | Sheet 16 of 60

Vinafix.com

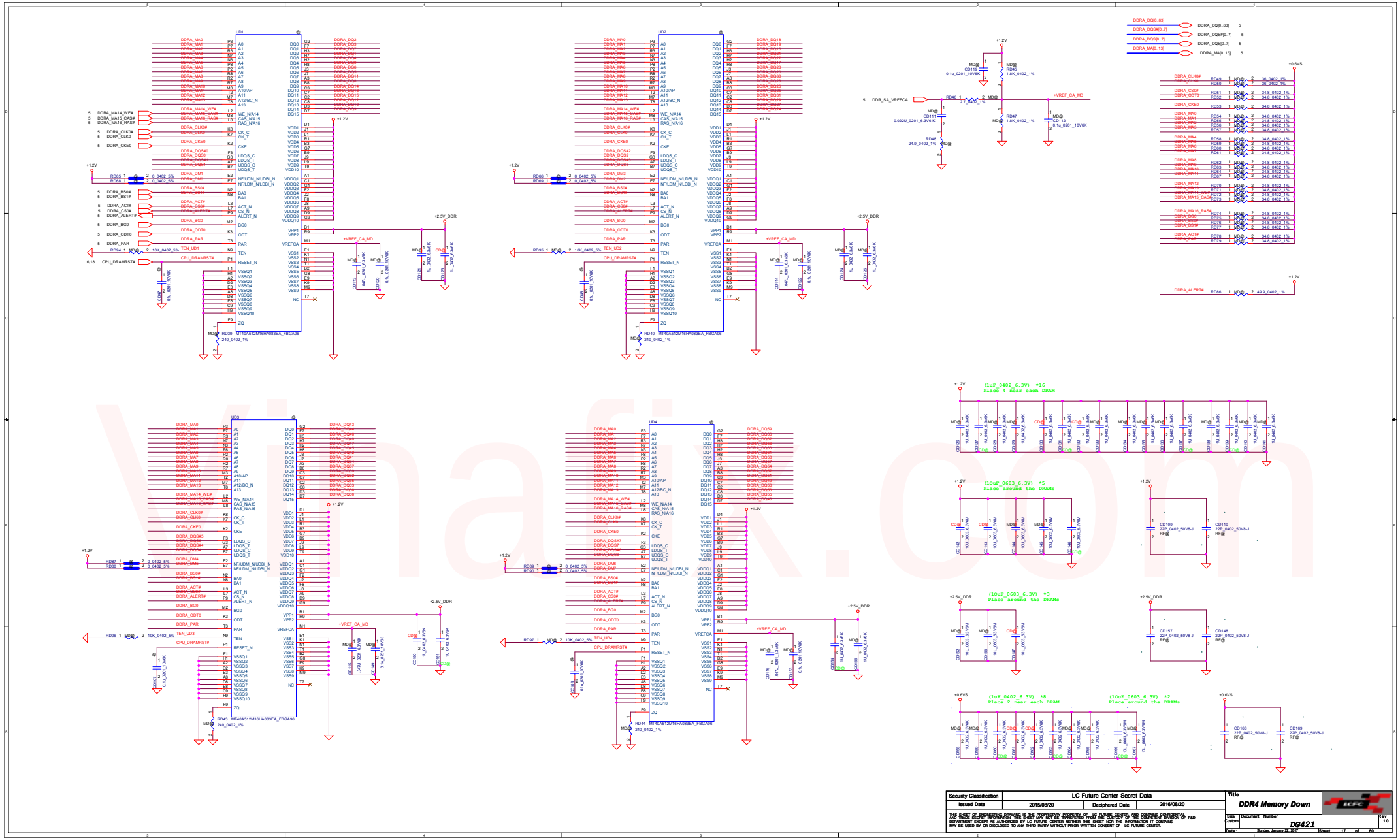

Security Classification	LC Future Center Secret Data		
Issued Date	2015/08/20	Deciphered Date	2016/08/20

THIS SHEET OF ENGINEERING DRAWING IS THE PROPRIETARY PROPERTY OF LC FUTURE CENTER AND CONTAINS CONFIDENTIAL AND TRADE SECRET INFORMATION. THIS SHEET MAY NOT BE TRANSFERRED FROM THE CUSTODY OF THE COMPETENT DIVISION OF R&D DEPARTMENT EXCEPT AS AUTHORIZED BY LC FUTURE CENTER NEITHER THIS SHEET NOR THE INFORMATION IT CONTAINS MAY BE USED BY OR DISCLOSED TO ANY THIRD PARTY WITHOUT PRIOR WRITTEN CONSENT OF LC FUTURE CENTER.

Title: **DDR4 Memory Down**

Size: Custom | Document Number: DG421 | Rev: 1.0

Date: Sunday, January 22, 2017 | Sheet 17 of 69

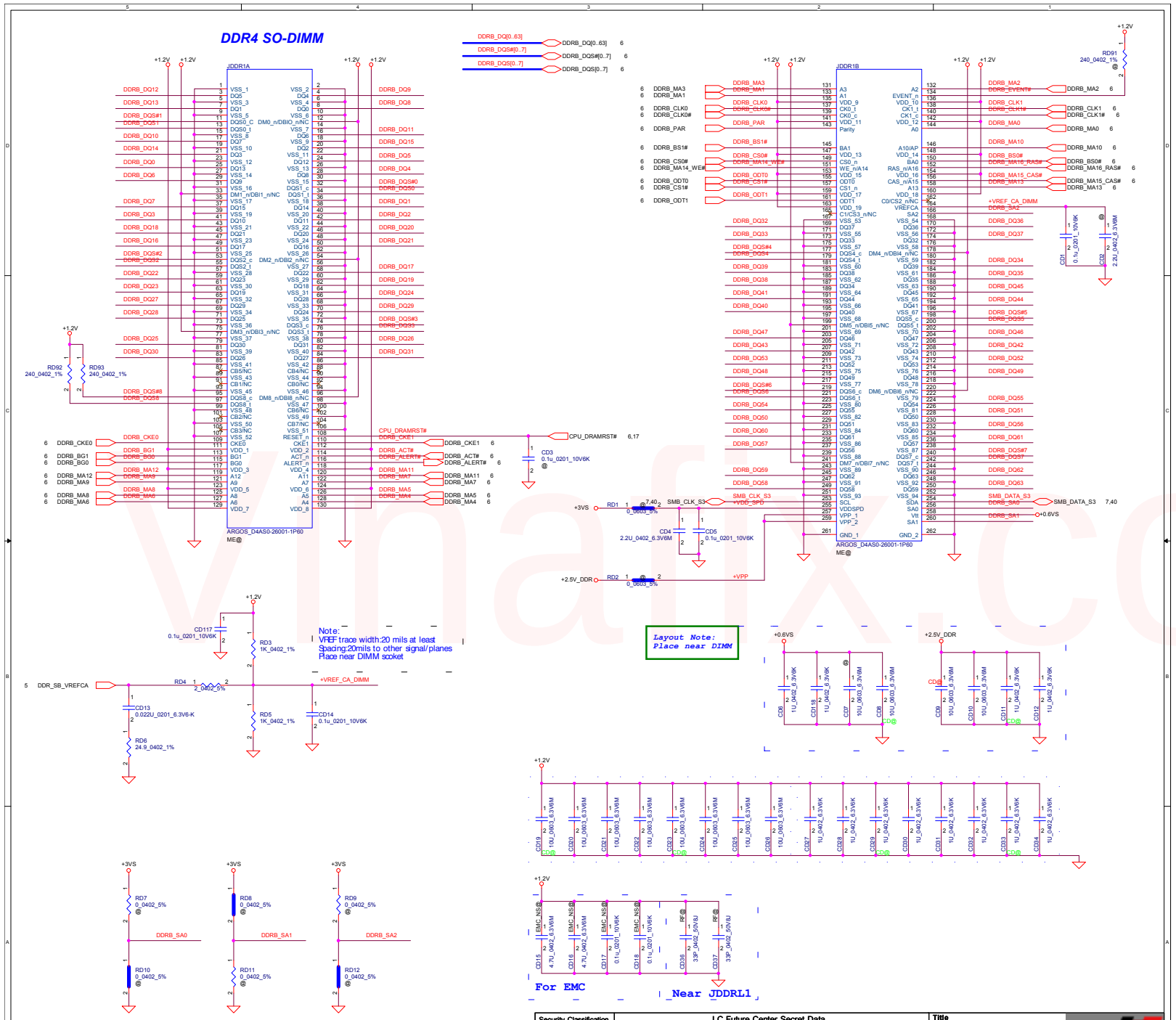

Security Classification	LC Future Center Secret Data		
Issued Date	2015/08/20	Deciphered Date	2016/08/20

THIS SHEET OF ENGINEERING DRAWING IS THE PROPRIETARY PROPERTY OF LC FUTURE CENTER, AND CONTAINS CONFIDENTIAL AND TRADE SECRET INFORMATION. THIS SHEET MAY NOT BE TRANSFERED FROM THE CUSTODY OF THE COMPETENT DIVISION OF R&D DEPARTMENT EXCEPT AS AUTHORIZED BY LC FUTURE CENTER NEITHER THIS SHEET NOR THE INFORMATION IT CONTAINS MAY BE USED BY OR DISCLOSED TO ANY THIRD PARTY WITHOUT PRIOR WRITTEN CONSENT OF LC FUTURE CENTER.

Title: DDR4 SO-DIMM

Size: Custom | Document Number: DG421 | Rev: 1.0

Date: Sunday, January 22, 2017 | Sheet 18 of 60

vinafix.com

N16x GPIO

GPIO	I/O	ACTIVE	Function Description
GPIO0	OUT	-	FB Enable for GC6 2.0
GPIO1	OUT	N/A	
GPIO2	OUT	N/A	
GPIO3	OUT	N/A	
GPIO4	OUT	N/A	
GPIO5	OUT	N/A	GPU power sequencing---3V3_MAIN_EN
GPIO6	IN	-	GPU wake signal for GC6 2.0
GPIO7	OUT	N/A	
GPIO8	I/O	-	System side PCIe reset Monitor
GPIO9	I/O	N/A	2.2K Pull-up
GPIO10	OUT		FBVREF_ALTV for GDDR5
GPIO11	OUT	-	GPU Core VDD PWM control signal
GPIO12	IN		AC Power Detect Input (10K pull High)
GPIO13	OUT	-	Phase Shedding
GPIO14	IN	N/A	
GPIO15	IN	N/A	
GPIO16		N/A	
GPIO17	IN	N/A	
GPIO18	IN	N/A	
GPIO19	IN	N/A	
GPIO20		N/A	
GPIO21	OUT		GPU PCIe self-reset control
OVERT	OUT		Active Low Thermal Catastrophic Over Temperature

N15V-GM Power Sequence

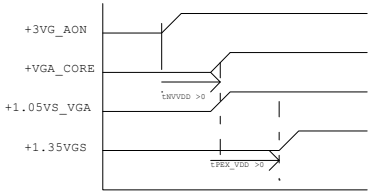

1. all power rail ramp up time should be larger than 40us~4ms

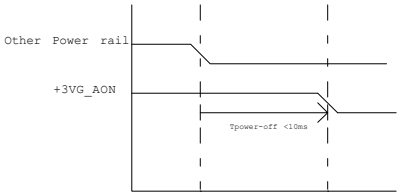

1.all GPU power rails should be turned off within 10ms
2. Optimus system VDD33 avoids drop down earlier than NVDD and FBVDDQ

Performance Mode P0 TDP and EDP-Continuous current (GDDR5)

Products	GPU (W)	Mem (W)	Min Core Clk (MHz)	NVVDD (V)	NVVDD (A)	NVVDD (W)	FBVDD (1.35V) (A)	FBVDD (1.35V) (W)	FBVDDQ (GPU+Mem) (1.35V) (A)	FBVDDQ (GPU+Mem) (1.35V) (W)	(1.05V) (6) (mA)	(1.05V) (6) (W)	Other (3.3V) (mA)	Other (3.3V) (W)
N16S-GMR	16	1.6	849	TBD	19	TBD	2	TBD	4.2	TBD	800	TBD	60	TBD
N16S-GTR	18	1.7	967		26.5		2		4.2		800		60	

N16x Multi-level Straps

Physical Strapping pin	Power Rail	Logical Strapping Bit3	Logical Strapping Bit2	Logical Strapping Bit1	Logical Strapping Bit0
ROM_SCLK	+3VGS	SOR3_EXPOSED	SOR2_EXPOSED	SOR1_EXPOSED	SOR0_EXPOSED
ROM_SI	+3VGS	RAM_CFG[3]	RAM_CFG[2]	RAM_CFG[1]	RAM_CFG[0]
ROM_SO	+3VGS	DEVID_SEL	PCIE_CFG	SMB_ALT_ADDR	VGA_DEVICE
STRAP0	+3VGS	Reserved(keep pull-up and pull-down footprint and stuff 50Kohm pull-up)			
STRAP1	+3VGS	Reserved(keep pull-up and pull-down footprint and not stuff by default)			
STRAP2	+3VGS				
STRAP3	+3VGS				
STRAP4	+3VGS				

vinafix.com

Security Classification	LC Future Center Secret Data		
Issued Date	2015/08/20	Deciphered Date	2016/08/20

THIS SHEET OF ENGINEERING DRAWING IS THE PROPRIETARY PROPERTY OF LC FUTURE CENTER, AND CONTAINS CONFIDENTIAL AND TRADE SECRET INFORMATION. THIS SHEET MAY NOT BE TRANSFERED FROM THE CUSTODY OF THE COMPETENT DIVISION OF R&D DEPARTMENT EXCEPT AS AUTHORIZED BY LC FUTURE CENTER NEITHER THIS SHEET NOR THE INFORMATION IT CONTAINS MAY BE USED BY OR DISCLOSED TO ANY THIRD PARTY WITHOUT PRIOR WRITTEN CONSENT OF LC FUTURE CENTER.

Title: VGA Notes List

Size: C | Document Number: DG421 | Rev: 1.0

Date: Sunday, January 22, 2017 | Sheet 19 of 60

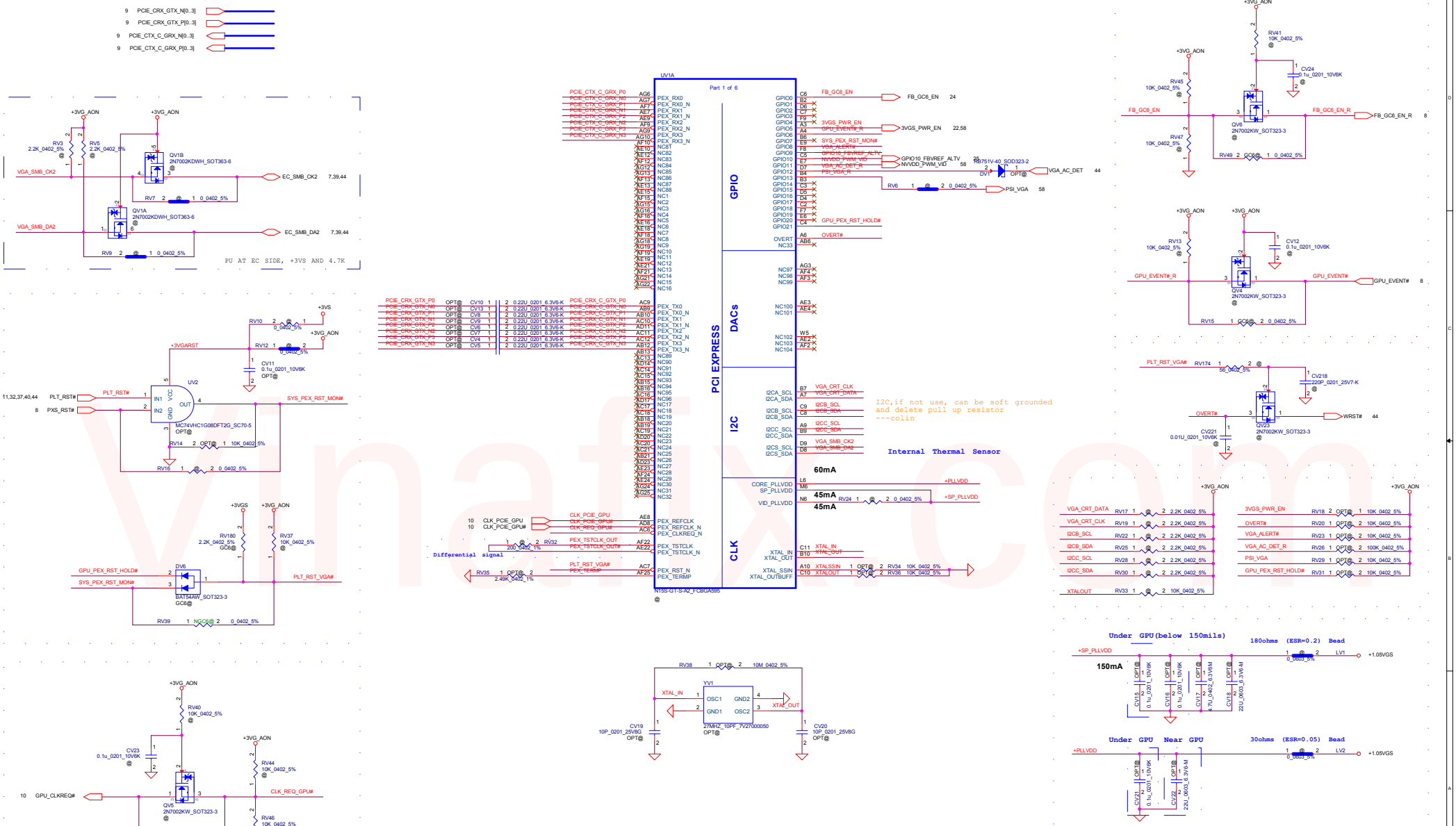

Security Classification	LC Future Center Secret Data		
Issued Date	2015/08/20	Deciphered Date	2016/08/20

THIS SHEET OF ENGINEERING DRAWING IS THE PROPRIETARY PROPERTY OF LC FUTURE CENTER, AND CONTAINS CONFIDENTIAL AND TRADE SECRET INFORMATION. THIS SHEET MAY NOT BE TRANSFERRED FROM THE CUSTODY OF THE COMPETENT DIVISION OF R&D DEPARTMENT EXCEPT AS AUTHORIZED BY LC FUTURE CENTER NEITHER THIS SHEET NOR THE INFORMATION IT CONTAINS MAY BE USED BY OR DISCLOSED TO ANY THIRD PARTY WITHOUT PRIOR WRITTEN CONSENT OF LC FUTURE CENTER.

Title: N16X_PCIE/ DAC/ GPIO

Size: Custom | Document Number: DG421 | Rev: 1.0

Date: Sunday, January 22, 2017 | Sheet 20 of 60

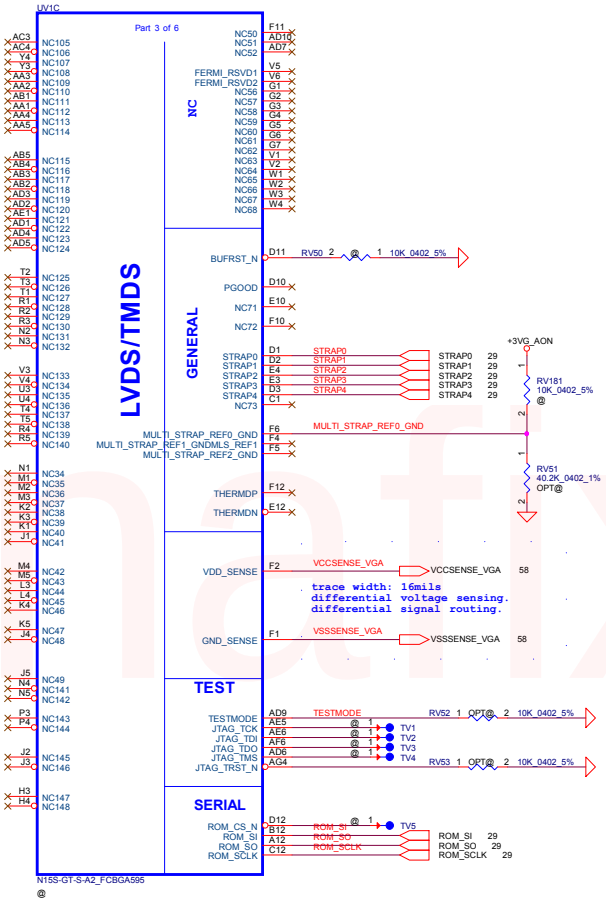

Security Classification	LC Future Center Secret Data		
Issued Date	2015/08/20	Deciphered Date	2016/08/20

THIS SHEET OF ENGINEERING DRAWING IS THE PROPRIETARY PROPERTY OF LC FUTURE CENTER, AND CONTAINS CONFIDENTIAL AND TRADE SECRET INFORMATION. THIS SHEET MAY NOT BE TRANSFERED FROM THE CUSTODY OF THE COMPETENT DIVISION OF R&D DEPARTMENT EXCEPT AS AUTHORIZED BY LC FUTURE CENTER NEITHER THIS SHEET NOR THE INFORMATION IT CONTAINS MAY BE USED BY OR DISCLOSED TO ANY THIRD PARTY WITHOUT PRIOR WRITTEN CONSENT OF LC FUTURE CENTER.

Title: N16X_LVDS/ HDMI/ THERM

Size: C | Document Number: DG421 | Rev: 1.0

Date: Sunday, January 22, 2017 | Sheet 21 of 60

Vinafix.com

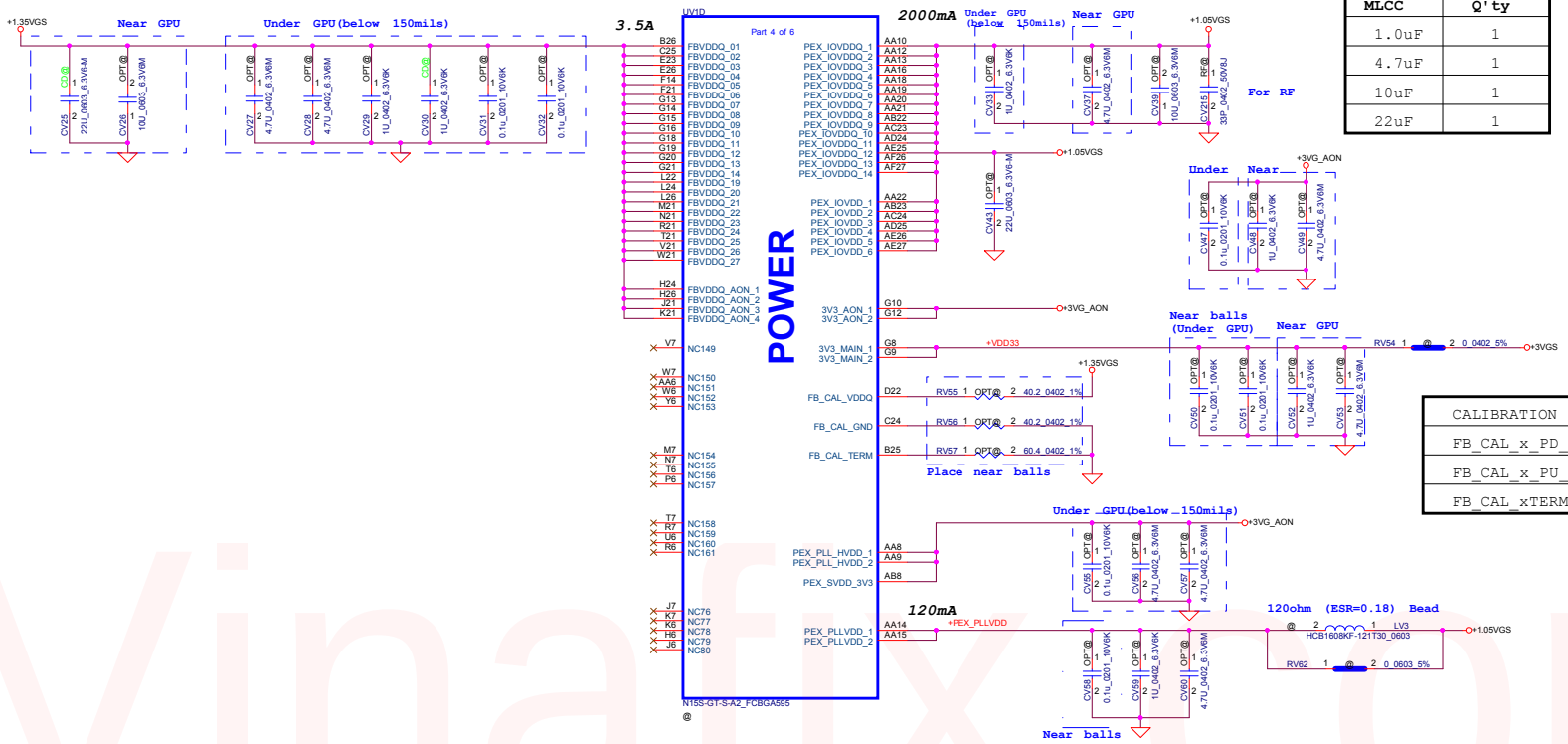

PEX_IOVVDD/Q Decouling

MLCC	Q'ty
1.0uF	1
4.7uF	1
10uF	1
22uF	1

CALIBRATION PIN	GDDR5
FB_CAL_x_PD_VDDQ	40.2Ohm
FB_CAL_x_PU_GND	40.2Ohm
FB_CAL_xTERM_GND	60.4Ohm

+3.3VS TO +3VG_AON

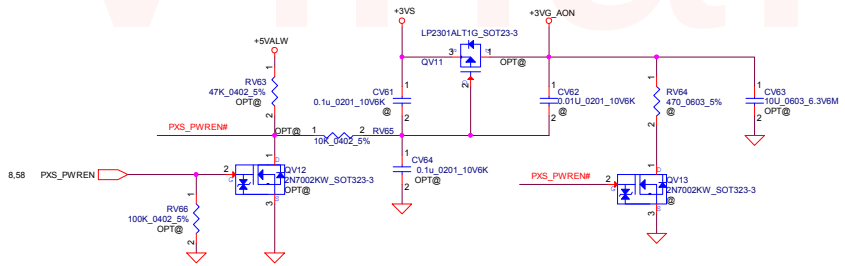

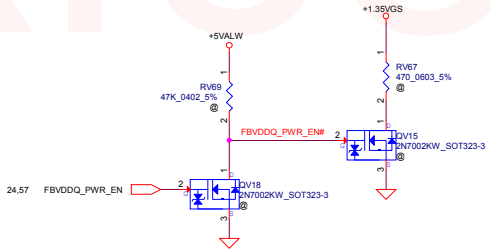

+3.3VS TO +3VGS

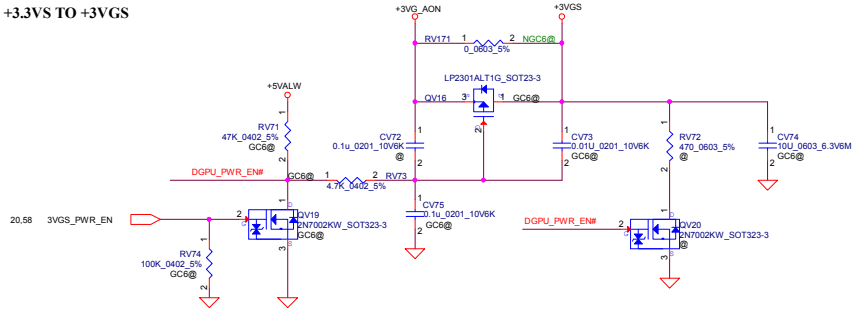

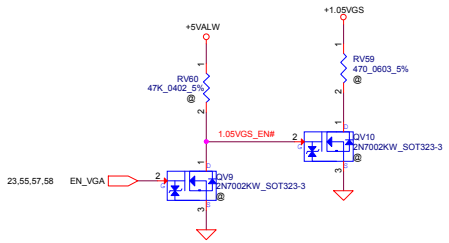

Security Classification	LC Future Center Secret Data		
Issued Date	2015/08/20	Deciphered Date	2016/08/20

THIS SHEET OF ENGINEERING DRAWING IS THE PROPRIETARY PROPERTY OF LC FUTURE CENTER, AND CONTAINS CONFIDENTIAL AND TRADE SECRET INFORMATION. THIS SHEET MAY NOT BE TRANSFERED FROM THE CUSTODY OF THE COMPETENT DIVISION OF R&D DEPARTMENT EXCEPT AS AUTHORIZED BY LC FUTURE CENTER NEITHER THIS SHEET NOR THE INFORMATION IT CONTAINS MAY BE USED BY OR DISCLOSED TO ANY THIRD PARTY WITHOUT PRIOR WRITTEN CONSENT OF LC FUTURE CENTER.

Title: **N16X_Power**

Size: C | Document Number: DG421 | Rev: 1.0

Date: Sunday, January 22, 2017 | Sheet 22 of 60

Vinafix.com

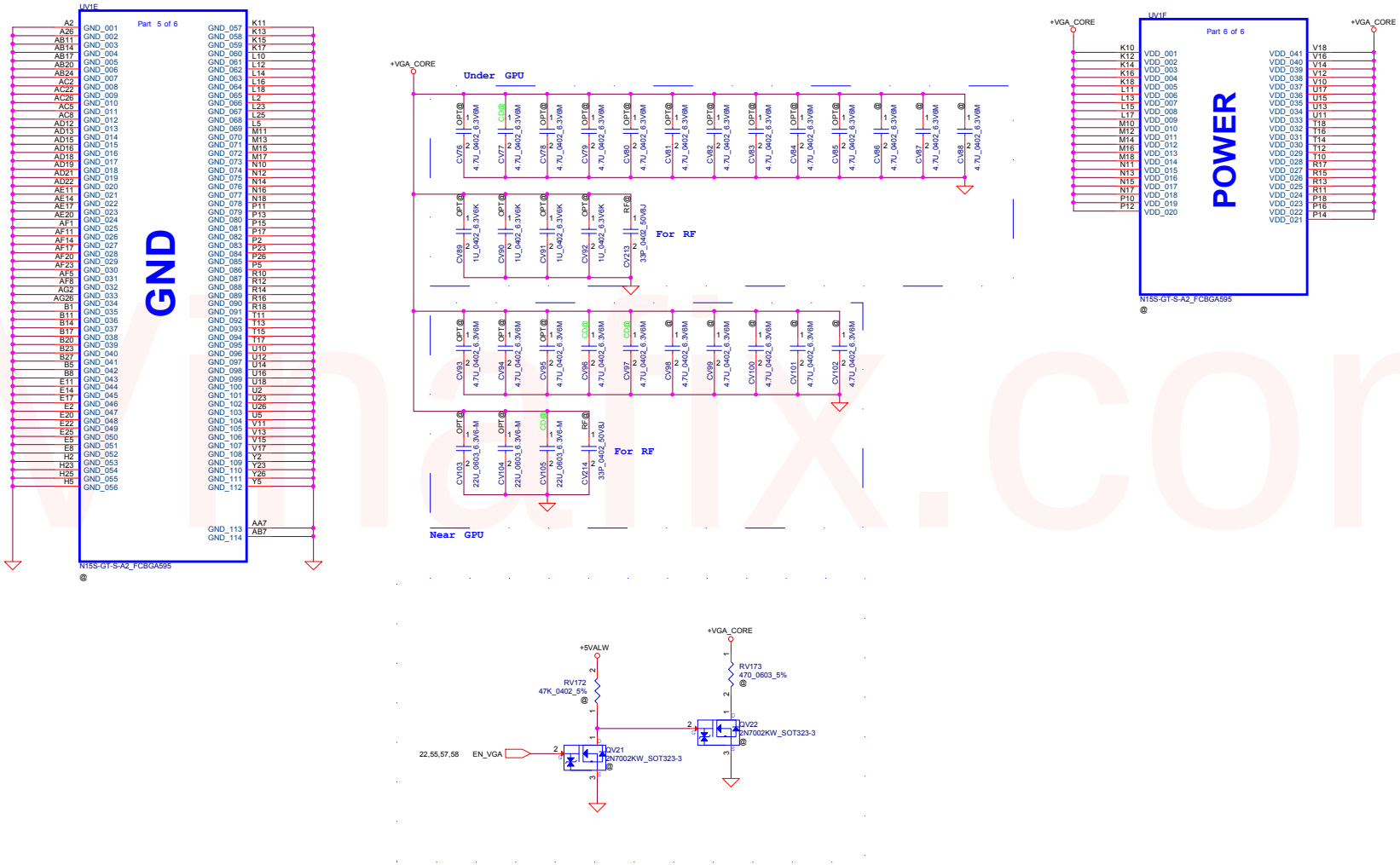

Security Classification	LC Future Center Secret Data		
Issued Date	2015/08/20	Deciphered Date	2016/08/20

THIS SHEET OF ENGINEERING DRAWING IS THE PROPRIETARY PROPERTY OF LC FUTURE CENTER, AND CONTAINS CONFIDENTIAL AND TRADE SECRET INFORMATION. THIS SHEET MAY NOT BE TRANSFERED FROM THE CUSTODY OF THE COMPETENT DIVISION OF R&D DEPARTMENT EXCEPT AS AUTHORIZED BY LC FUTURE CENTER NEITHER THIS SHEET NOR THE INFORMATION IT CONTAINS MAY BE USED BY OR DISCLOSED TO ANY THIRD PARTY WITHOUT PRIOR WRITTEN CONSENT OF LC FUTURE CENTER.

Title: N16X_+VGA CORE, GND

Size: C | Document Number: DG421 | Rev: 1.0

Date: Sunday, January 22, 2017 | Sheet 23 of 60

Vinafix.com

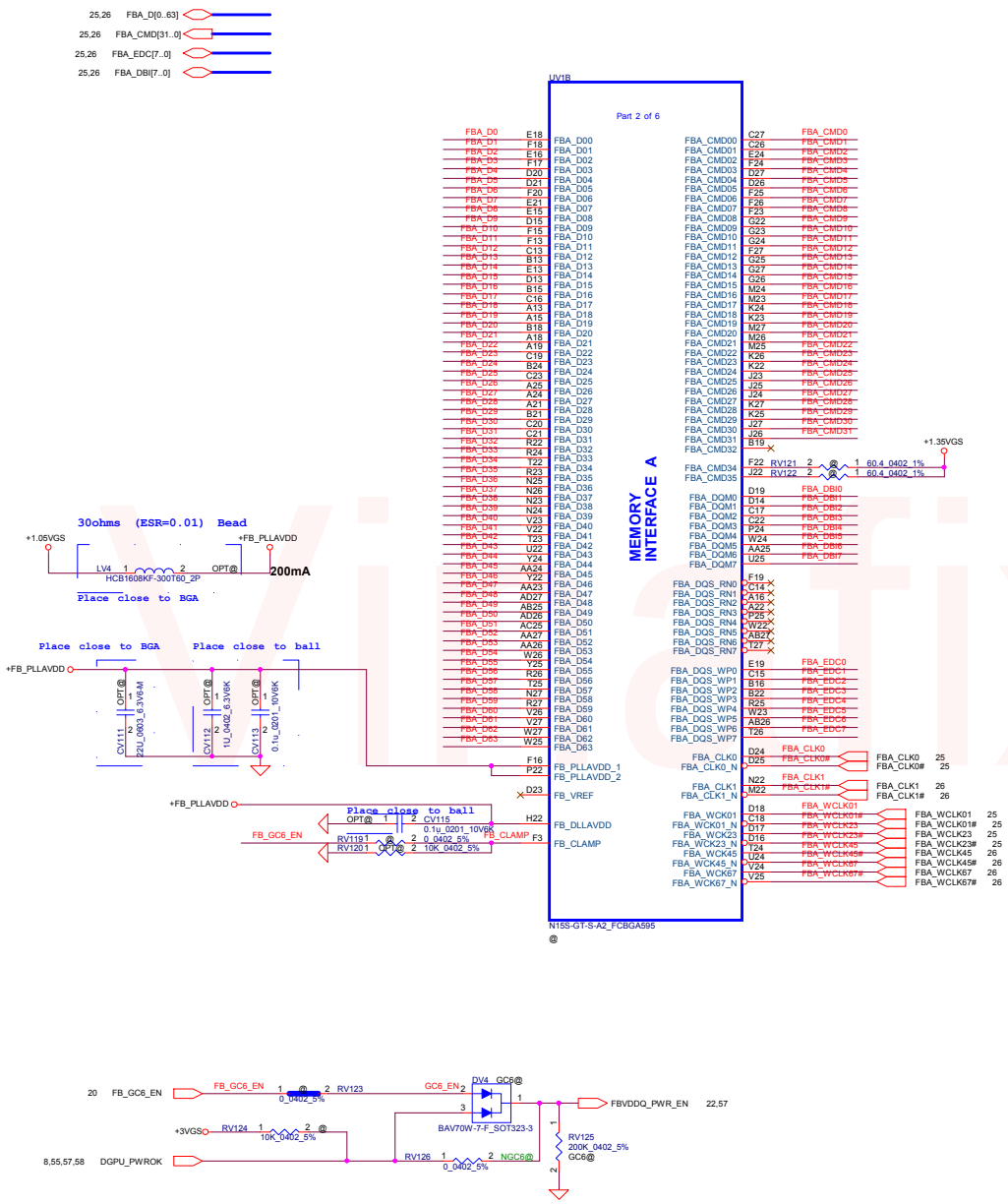

Security Classification	LC Future Center Secret Data		
Issued Date	2015/08/20	Deciphered Date	2016/08/20

THIS SHEET OF ENGINEERING DRAWING IS THE PROPRIETARY PROPERTY OF LC FUTURE CENTER, AND CONTAINS CONFIDENTIAL AND TRADE SECRET INFORMATION. THIS SHEET MAY NOT BE TRANSFERED FROM THE CUSTODY OF THE COMPETENT DIVISION OF R&D DEPARTMENT EXCEPT AS AUTHORIZED BY LC FUTURE CENTER NEITHER THIS SHEET NOR THE INFORMATION IT CONTAINS MAY BE USED BY OR DISCLOSED TO ANY THIRD PARTY WITHOUT PRIOR WRITTEN CONSENT OF LC FUTURE CENTER.

Title: **N16X_MEM Interface**

Size: C | Document Number: DG421 | Rev: 1.0

Date: Sunday, January 22, 2017 | Sheet 24 of 60

Vinafix.com

Lower 32 bits

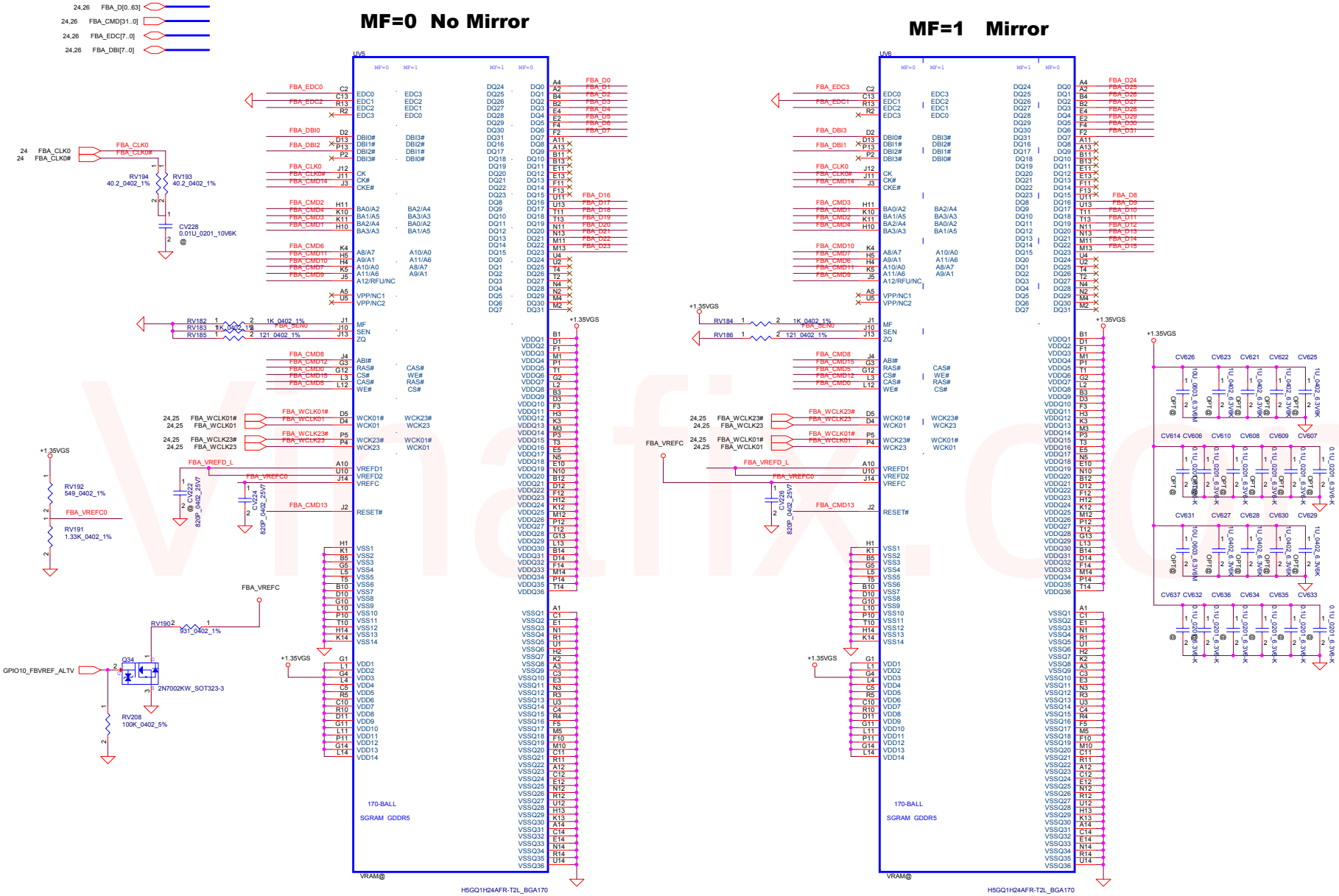

Security Classification	LC Future Center Secret Data		
Issued Date	2015/08/20	Deciphered Date	2016/08/20

THIS SHEET OF ENGINEERING DRAWING IS THE PROPRIETARY PROPERTY OF LC FUTURE CENTER, AND CONTAINS CONFIDENTIAL AND TRADE SECRET INFORMATION. THIS SHEET MAY NOT BE TRANSFERED FROM THE CUSTODY OF THE COMPETENT DIVISION OF R&D DEPARTMENT EXCEPT AS AUTHORIZED BY LC FUTURE CENTER NEITHER THIS SHEET NOR THE INFORMATION IT CONTAINS MAY BE USED BY OR DISCLOSED TO ANY THIRD PARTY WITHOUT PRIOR WRITTEN CONSENT OF LC FUTURE CENTER.

Title: N16X_GDDR5_Rank0_[31:0]

Size: C | Document Number: DG421 | Rev: 1.0

Date: Sunday, January 22, 2017 | Sheet 25 of 60

upper 32 bits

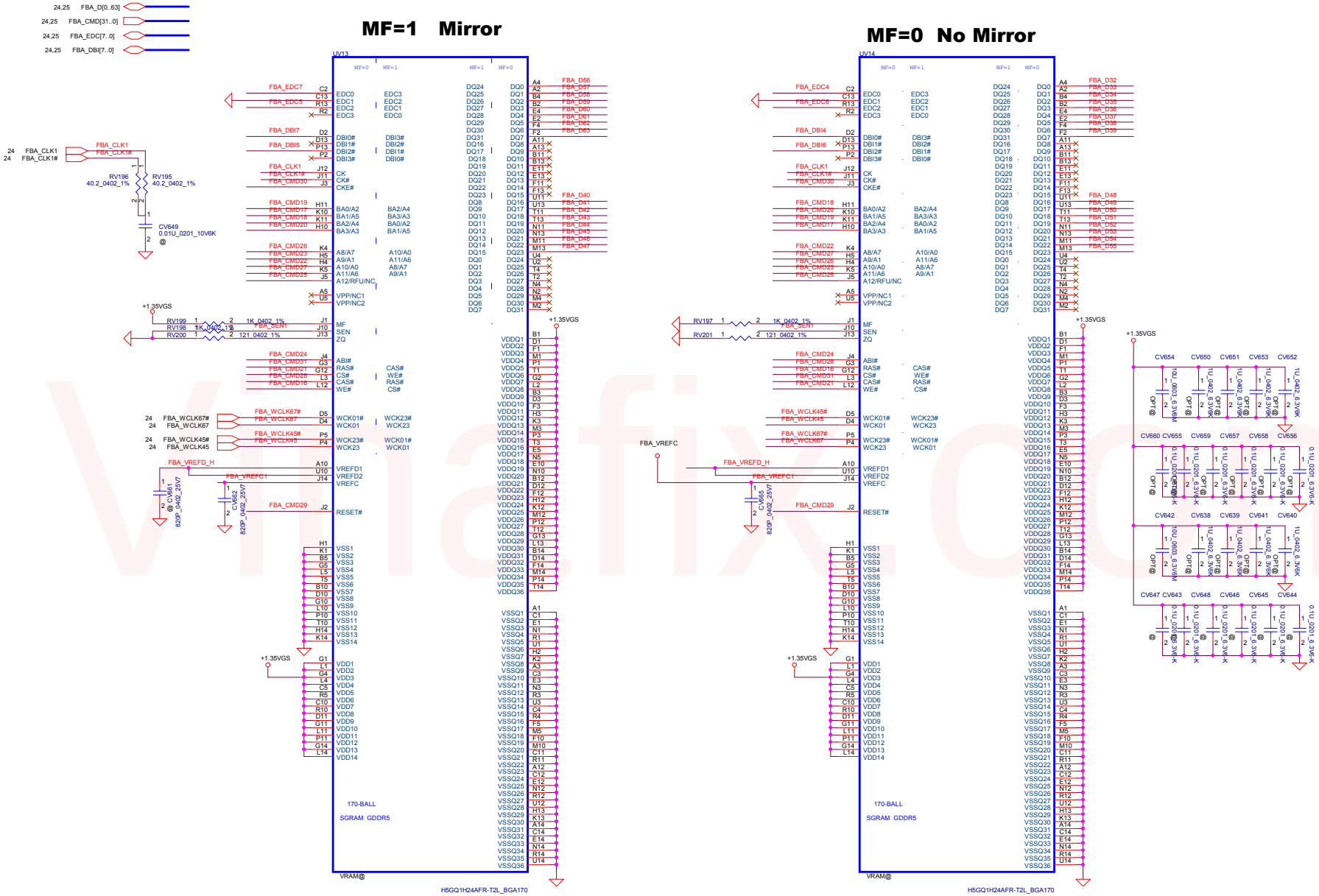

Security Classification	LC Future Center Secret Data		
Issued Date	2015/08/20	Deciphered Date	2016/08/20

THIS SHEET OF ENGINEERING DRAWING IS THE PROPRIETARY PROPERTY OF LC FUTURE CENTER, AND CONTAINS CONFIDENTIAL AND TRADE SECRET INFORMATION. THIS SHEET MAY NOT BE TRANSFERED FROM THE CUSTODY OF THE COMPETENT DIVISION OF R&D DEPARTMENT EXCEPT AS AUTHORIZED BY LC FUTURE CENTER NEITHER THIS SHEET NOR THE INFORMATION IT CONTAINS MAY BE USED BY OR DISCLOSED TO ANY THIRD PARTY WITHOUT PRIOR WRITTEN CONSENT OF LC FUTURE CENTER.

Title: N16X_GDDR5_Rank0_[64:3

Size: C | Document Number: DG421 | Rev: 1.0

Date: Sunday, January 22, 2017 | Sheet 26 of 60

Vinafix.com

Vinafix.com

Security Classification	LC Future Center Secret Data		
Issued Date	2015/08/20	Deciphered Date	2016/08/20

THIS SHEET OF ENGINEERING DRAWING IS THE PROPRIETARY PROPERTY OF LC FUTURE CENTER, AND CONTAINS CONFIDENTIAL AND TRADE SECRET INFORMATION. THIS SHEET MAY NOT BE TRANSFERED FROM THE CUSTODY OF THE COMPETENT DIVISION OF R&D DEPARTMENT EXCEPT AS AUTHORIZED BY LC FUTURE CENTER NEITHER THIS SHEET NOR THE INFORMATION IT CONTAINS MAY BE USED BY OR DISCLOSED TO ANY THIRD PARTY WITHOUT PRIOR WRITTEN CONSENT OF LC FUTURE CENTER.

Title

N16X_DDR3_Rank1_[31:0]

Size	Document Number	Rev
C	DG421	1.0

Date: Sunday, January 22, 2017 Sheet 27 of 60

Vinafix.com

Vinafix.com

Security Classification	LC Future Center Secret Data		
Issued Date	2015/08/20	Deciphered Date	2016/08/20

THIS SHEET OF ENGINEERING DRAWING IS THE PROPRIETARY PROPERTY OF LC FUTURE CENTER, AND CONTAINS CONFIDENTIAL AND TRADE SECRET INFORMATION. THIS SHEET MAY NOT BE TRANSFERED FROM THE CUSTODY OF THE COMPETENT DIVISION OF R&D DEPARTMENT EXCEPT AS AUTHORIZED BY LC FUTURE CENTER NEITHER THIS SHEET NOR THE INFORMATION IT CONTAINS MAY BE USED BY OR DISCLOSED TO ANY THIRD PARTY WITHOUT PRIOR WRITTEN CONSENT OF LC FUTURE CENTER.

Title

N16X_DDR3_Rank1_[64:32]

Size	Document Number	Rev
C	DG421	1.0

Date: Sunday, January 22, 2017 Sheet 28 of 60

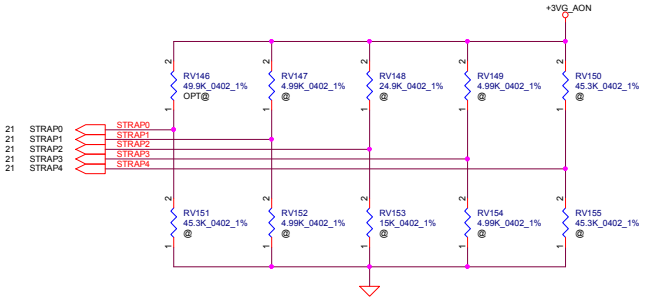

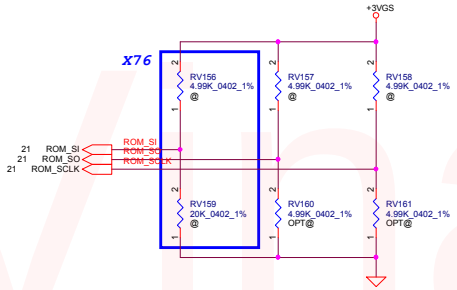

Physical Strapping pin	Power Rail	Logical Strapping Bit3	Logical Strapping Bit2	Logical Strapping Bit1	Logical Strapping Bit0
ROM_SCLK	+3VGS	SOR3_EXPOSED	SOR2_EXPOSED	SOR1_EXPOSED	SOR0_EXPOSED
ROM_SI	+3VGS	RAM_CFG[3]	RAM_CFG[2]	RAM_CFG[1]	RAM_CFG[0]
ROM_SO	+3VGS	DEVID_SEL	PCIE_CFG	SMB_ALT_ADDR	VGA_DEVICE
STRAP0	+3VGS	Reserved(keep pull-up and pull-down footprint and stuff 50Kohm pull-up)			
STRAP1	+3VGS	Reserved(keep pull-up and pull-down footprint and not stuff by default)			
STRAP2	+3VGS				
STRAP3	+3VGS				
STRAP4	+3VGS				

Resistor Values	Pull-up to +3VGS	Pull-down to Gnd
4.99K	1000	0000
10K	1001	0001
15K	1010	0010
20K	1011	0011
24.9K	1100	0100
30.1K	1101	0101
34.8K	1110	0110
45.3K	1111	0111

DEVID_SEL	
0	(Default)
1	

PCIE_CFG	
0	(Default)
1	

SMBUS_ALT_ADDR	
0	0x9E (Default)
1	0x9C (Multi-GPU usage)

VGA_DEVICE	
0	3D Device (Class Code 302h)
1	VGA Device (Default)

GPU	Configuration	FB Memory (DDR3L)		ROM_SI	ROM_SO	ROM_SCLK	STRAP0	STRAP1	STRAP2	STRAP3	STRAP4
N16S-GTR N16V-GMR1	2G VRAM	Samsung 2500MHz	K4G41325FE-HC28	0x7	PD 4.99K	PD 4.99K	PU 49.9K	Un-stuff	Un-stuff	Un-stuff	Un-stuff
			256M x 16	PD 45.3K							
		Hynix 2500MHz	H5GC4H24AJR-T2C	0x6							
			256M x 16	PD 34.8K							
		Micron 2500MHz	EDW4032BABG-60-F	0x4							
			256M x 16	PD 24.9K							
	4G VRAM	Samsung 2500MHz	K4G80325FB-HC03	0x0							
			512M x 16	PD 4.99K							
		Hynix 2500MHz	H5GC8H24MJR-T2C	0x5							
			512M x 16	PD 30.1K							
		Micron 2500MHz	MT51J256M32HF-60:A	0x1							
			512M x 16	PD 10K							

Vinafix.com

THIS SHEET OF ENGINEERING DRAWING IS THE PROPRIETARY PROPERTY OF LC FUTURE CENTER, AND CONTAINS CONFIDENTIAL AND TRADE SECRET INFORMATION. THIS SHEET MAY NOT BE TRANSFERED FROM THE CUSTODY OF THE COMPETENT DIVISION OF R&D DEPARTMENT EXCEPT AS AUTHORIZED BY LC FUTURE CENTER NEITHER THIS SHEET NOR THE INFORMATION IT CONTAINS MAY BE USED BY OR DISCLOSED TO ANY THIRD PARTY WITHOUT PRIOR WRITTEN CONSENT OF LC FUTURE CENTER.

Security Classification	LC Future Center Secret Data		
Issued Date	2015/08/20	Deciphered Date	2016/08/20

Title: N16X_MISC

Size: C | Document Number: DG421 | Rev: 1.0

Date: Sunday, January 22, 2017 | Sheet 29 of 60

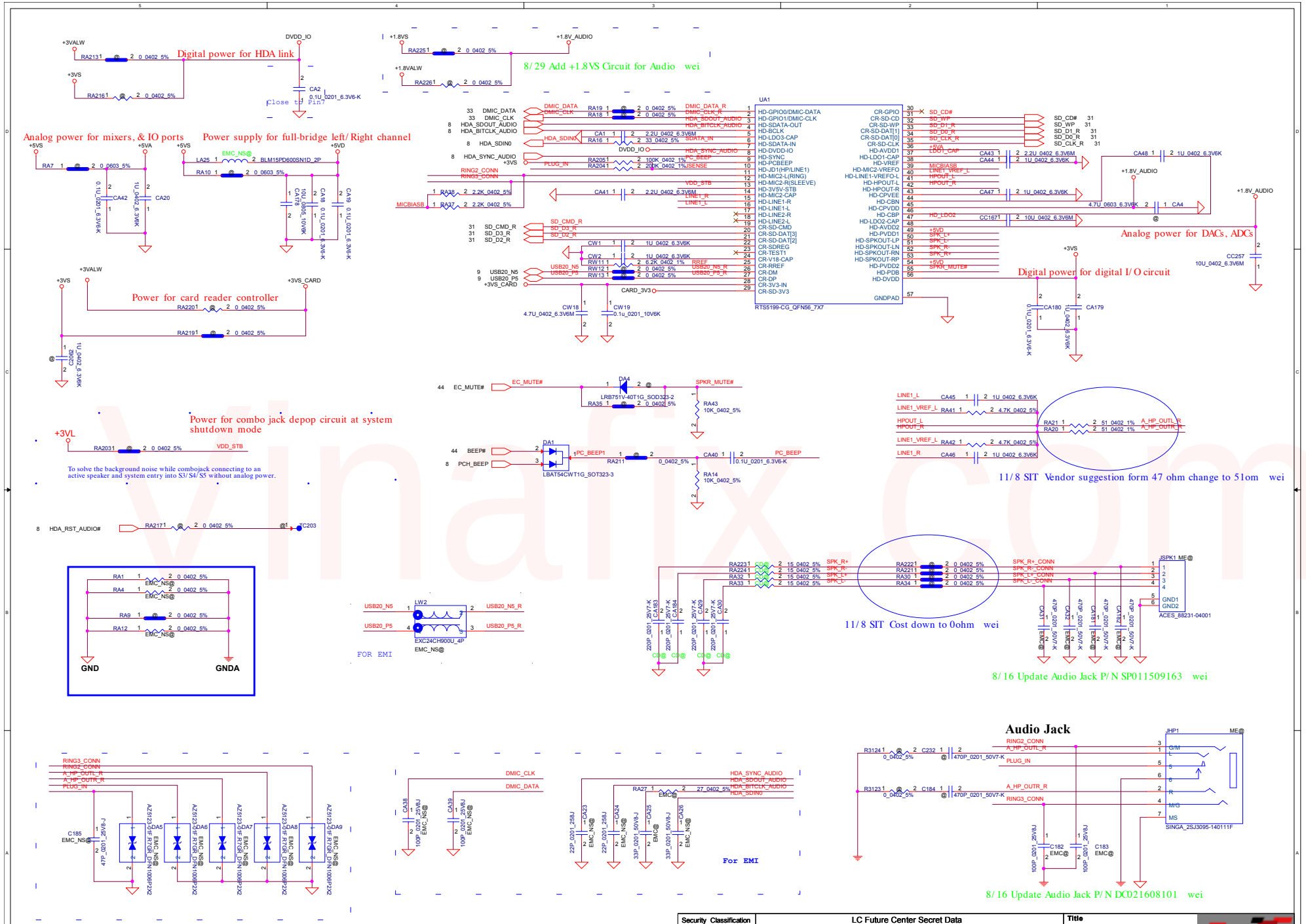

Security Classification	LC Future Center Secret Data		
Issued Date	2015/08/20	Deciphered Date	2016/08/20

THIS SHEET OF ENGINEERING DRAWING IS THE PROPRIETARY PROPERTY OF LC FUTURE CENTER, AND CONTAINS CONFIDENTIAL AND TRADE SECRET INFORMATION. THIS SHEET MAY NOT BE TRANSFERED FROM THE CUSTODY OF THE COMPETENT DIVISION OF R&D DEPARTMENT EXCEPT AS AUTHORIZED BY LC FUTURE CENTER NEITHER THIS SHEET NOR THE INFORMATION IT CONTAINS MAY BE USED BY OR DISCLOSED TO ANY THIRD PARTY WITHOUT PRIOR WRITTEN CONSENT OF LC FUTURE CENTER.

Title: **Codec & CR_RTS5199**

Size: C | Document Number: DG421 | Rev: 1.0

Date: Sunday, January 22, 2017 | Sheet 30 of 60

vinafix.com

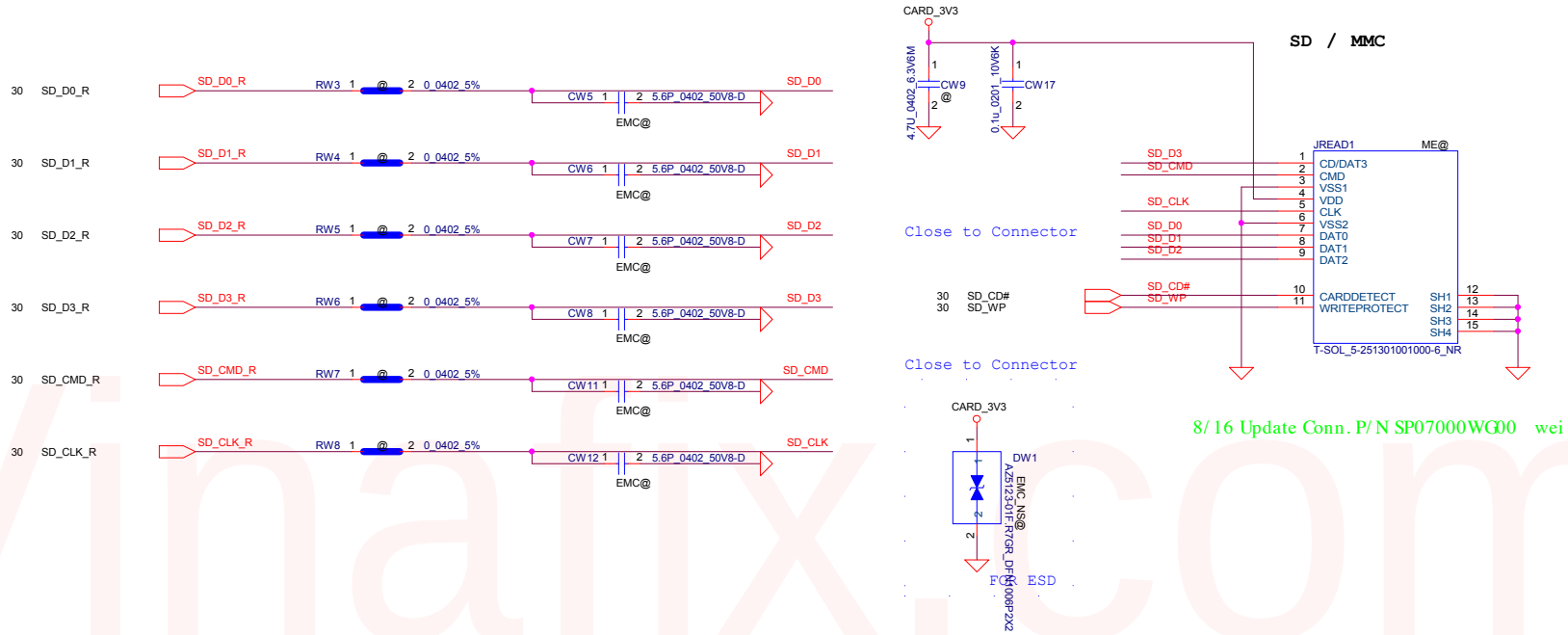

8/16 Update Conn. P/N SP07000WG00 wei

Vinafix.com

Security Classification	LC Future Center Secret Data		
Issued Date	2015/08/20	Deciphered Date	2016/08/20

THIS SHEET OF ENGINEERING DRAWING IS THE PROPRIETARY PROPERTY OF LC FUTURE CENTER. AND CONTAINS CONFIDENTIAL AND TRADE SECRET INFORMATION. THIS SHEET MAY NOT BE TRANSFERED FROM THE CUSTODY OF THE COMPETENT DIVISION OF R&D DEPARTMENT EXCEPT AS AUTHORIZED BY LC FUTURE CENTER NEITHER THIS SHEET NOR THE INFORMATION IT CONTAINS MAY BE USED BY OR DISCLOSED TO ANY THIRD PARTY WITHOUT PRIOR WRITTEN CONSENT OF LC FUTURE CENTER.

Title: **Cardreader**

Size: Custom | Document Number: **DG421** | Rev: 1.0

Date: Sunday, January 22, 2017 | Sheet 31 of 60

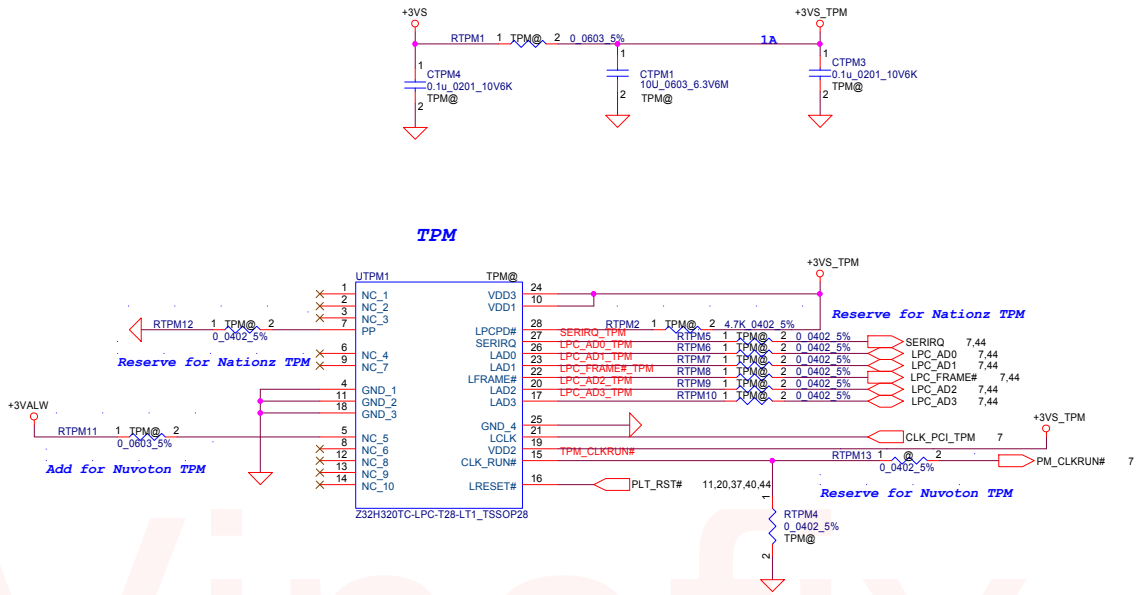

	Nationz TPM	Nuvoton TPM
RTPM2	Stuff	NC
RTPM12	Stuff	NC
RTPM11	NC	Stuff

Vinafix.com

Security Classification	LC Future Center Secret Data		
Issued Date	2015/08/20	Deciphered Date	2016/08/20

THIS SHEET OF ENGINEERING DRAWING IS THE PROPRIETARY PROPERTY OF LC FUTURE CENTER. AND CONTAINS CONFIDENTIAL AND TRADE SECRET INFORMATION. THIS SHEET MAY NOT BE TRANSFERED FROM THE CUSTODY OF THE COMPETENT DIVISION OF R&D DEPARTMENT EXCEPT AS AUTHORIZED BY LC FUTURE CENTER NEITHER THIS SHEET NOR THE INFORMATION IT CONTAINS MAY BE USED BY OR DISCLOSED TO ANY THIRD PARTY WITHOUT PRIOR WRITTEN CONSENT OF LC FUTURE CENTER.

Title: TPM

Size: Custom | Document Number: DG421 | Rev: 1.0

Date: Sunday, January 22, 2017 | Sheet 32 of 60

LCD POWER CIRCUIT

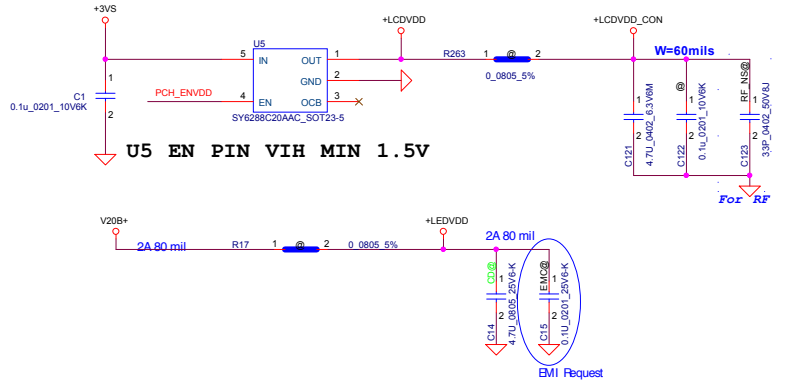

U5 EN PIN VIH MIN 1.5V

CMOS Camera

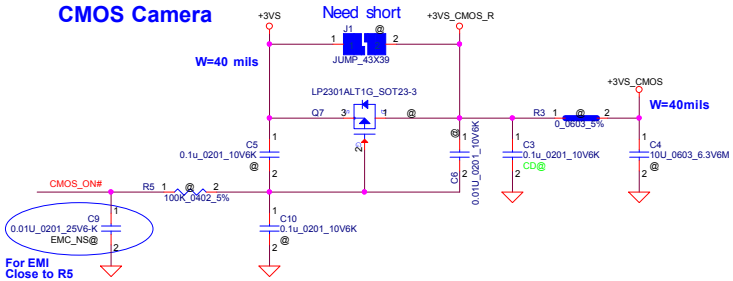

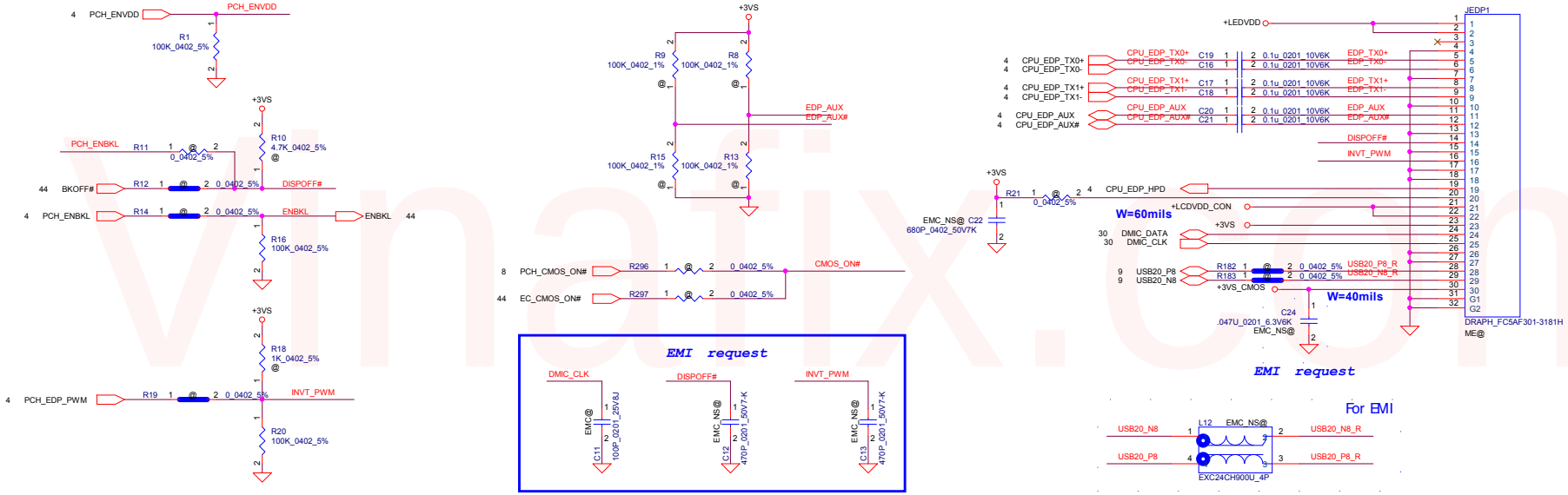

Touch Screen

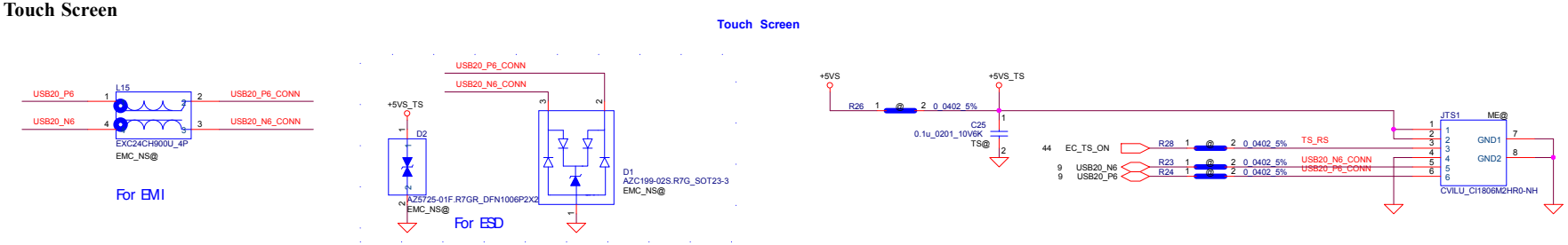

Security Classification	LC Future Center Secret Data		
Issued Date	2015/08/20	Deciphered Date	2016/08/20

THIS SHEET OF ENGINEERING DRAWING IS THE PROPRIETARY PROPERTY OF LC FUTURE CENTER. AND CONTAINS CONFIDENTIAL AND TRADE SECRET INFORMATION. THIS SHEET MAY NOT BE TRANSFERRED FROM THE CUSTODY OF THE COMPETENT DIVISION OF R&D DEPARTMENT EXCEPT AS AUTHORIZED BY LC FUTURE CENTER NEITHER THIS SHEET NOR THE INFORMATION IT CONTAINS MAY BE USED BY OR DISCLOSED TO ANY THIRD PARTY WITHOUT PRIOR WRITTEN CONSENT OF LC FUTURE CENTER.

Title: eDP/CMOS/Touch screen

Size: Custom | Document Number: DG421 | Rev: 1.0

Date: Sunday, January 22, 2017 | Sheet 33 of 60

vinafix.com

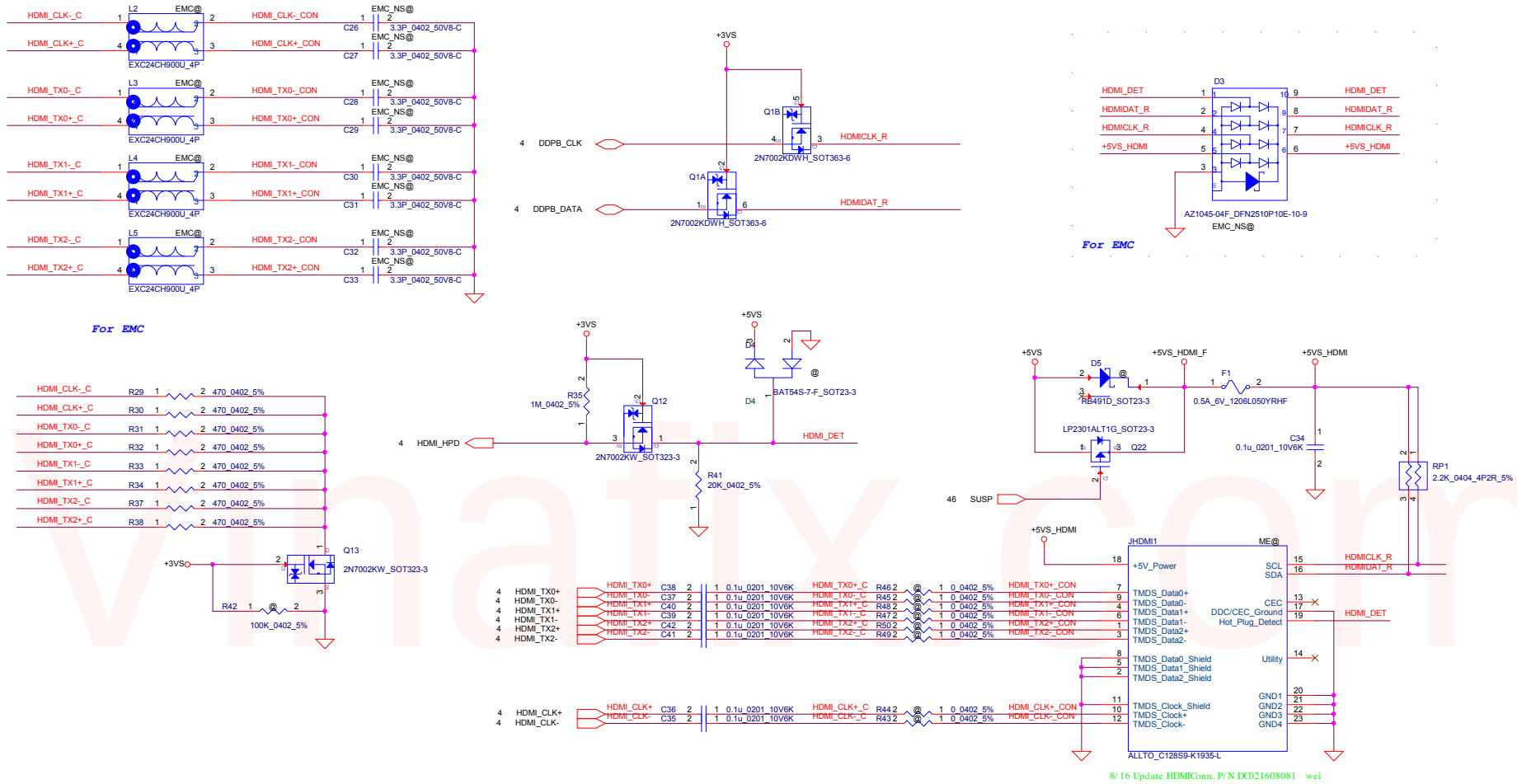

Close to JHDMI1

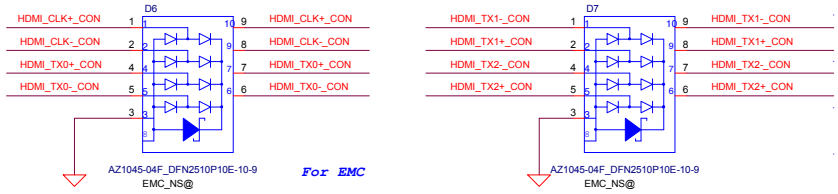

Security Classification	LC Future Center Secret Data		
Issued Date	2015/08/20	Deciphered Date	2016/08/20

THIS SHEET OF ENGINEERING DRAWING IS THE PROPRIETARY PROPERTY OF LC FUTURE CENTER. AND CONTAINS CONFIDENTIAL AND TRADE SECRET INFORMATION. THIS SHEET MAY NOT BE TRANSFERED FROM THE CUSTODY OF THE COMPETENT DIVISION OF R&D DEPARTMENT EXCEPT AS AUTHORIZED BY LC FUTURE CENTER NEITHER THIS SHEET NOR THE INFORMATION IT CONTAINS MAY BE USED BY OR DISCLOSED TO ANY THIRD PARTY WITHOUT PRIOR WRITTEN CONSENT OF LC FUTURE CENTER.

Title: **HDMI_CONN**

Size: Custom | Document Number: DG421 | Rev: 1.0

Date: Sunday, January 22, 2017 | Sheet 34 of 60

Vinafix.com

Security Classification	LC Future Center Secret Data		
Issued Date	2015/08/20	Deciphered Date	2016/08/20

THIS SHEET OF ENGINEERING DRAWING IS THE PROPRIETARY PROPERTY OF LC FUTURE CENTER. AND CONTAINS CONFIDENTIAL AND TRADE SECRET INFORMATION. THIS SHEET MAY NOT BE TRANSFERED FROM THE CUSTODY OF THE COMPETENT DIVISION OF R&D DEPARTMENT EXCEPT AS AUTHORIZED BY LC FUTURE CENTER NEITHER THIS SHEET NOR THE INFORMATION IT CONTAINS MAY BE USED BY OR DISCLOSED TO ANY THIRD PARTY WITHOUT PRIOR WRITTEN CONSENT OF LC FUTURE CENTER.

Title

P35-Blank

Size	Document Number	Rev
Custom	DG421	1.0

Date: Sunday, January 22, 2017 | Sheet 35 of 60

Vinafix.com

Security Classification	LC Future Center Secret Data		
Issued Date	2015/08/20	Deciphered Date	2016/08/20

THIS SHEET OF ENGINEERING DRAWING IS THE PROPRIETARY PROPERTY OF LC FUTURE CENTER. AND CONTAINS CONFIDENTIAL AND TRADE SECRET INFORMATION. THIS SHEET MAY NOT BE TRANSFERED FROM THE CUSTODY OF THE COMPETENT DIVISION OF R&D DEPARTMENT EXCEPT AS AUTHORIZED BY LC FUTURE CENTER NEITHER THIS SHEET NOR THE INFORMATION IT CONTAINS MAY BE USED BY OR DISCLOSED TO ANY THIRD PARTY WITHOUT PRIOR WRITTEN CONSENT OF LC FUTURE CENTER.

Title

Blank

Size	Document Number	Rev
Custom	DG421	1.0

Date: Sunday, January 22, 2017 | Sheet 36 of 60

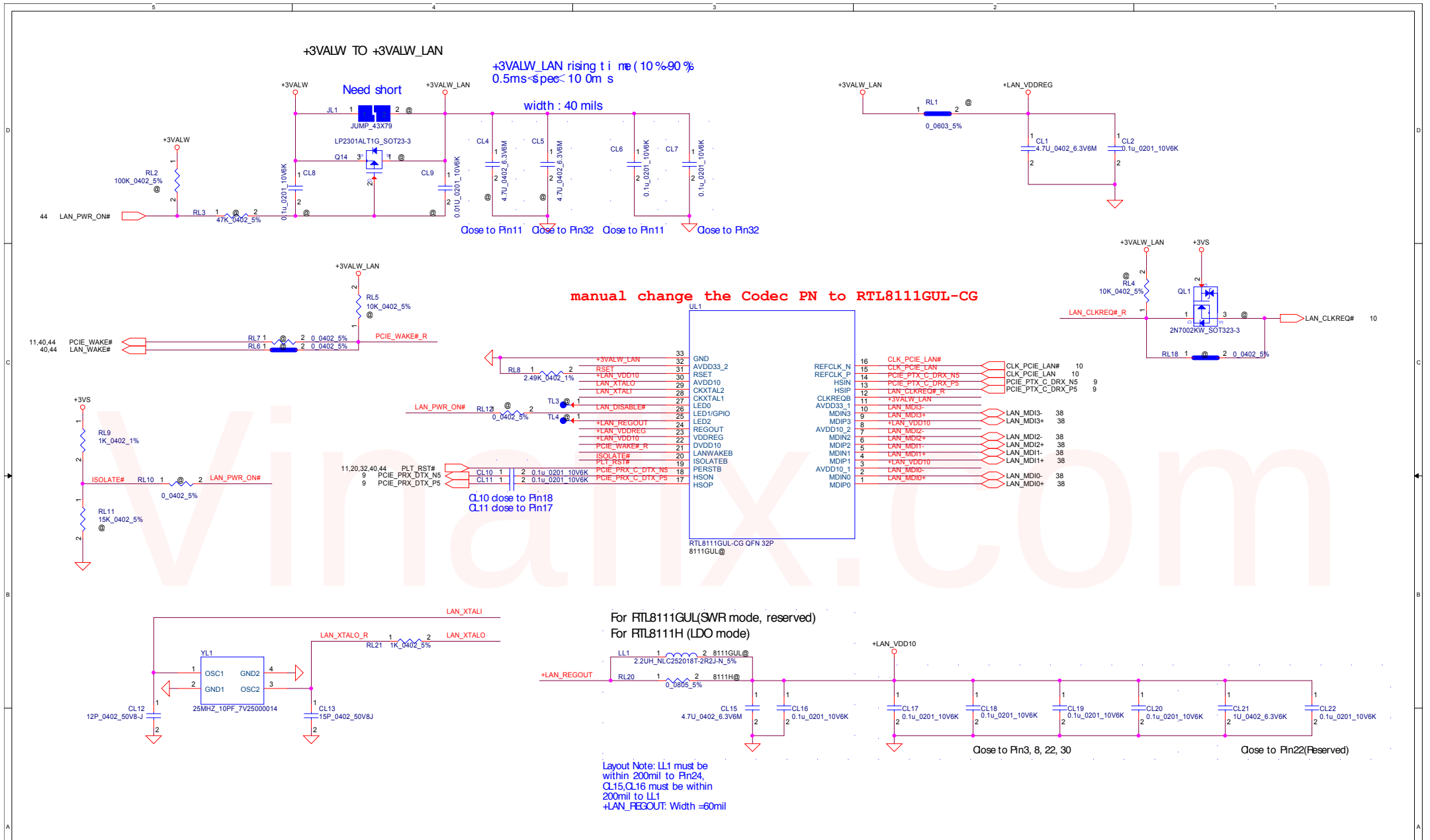

Security Classification	LC Future Center Secret Data		
Issued Date	2015/08/20	Deciphered Date	2016/08/20

THIS SHEET OF ENGINEERING DRAWING IS THE PROPRIETARY PROPERTY OF LC FUTURE CENTER. AND CONTAINS CONFIDENTIAL AND TRADE SECRET INFORMATION. THIS SHEET MAY NOT BE TRANSFERED FROM THE CUSTODY OF THE COMPETENT DIVISION OF R&D DEPARTMENT EXCEPT AS AUTHORIZED BY LC FUTURE CENTER NEITHER THIS SHEET NOR THE INFORMATION IT CONTAINS MAY BE USED BY OR DISCLOSED TO ANY THIRD PARTY WITHOUT PRIOR WRITTEN CONSENT OF LC FUTURE CENTER.

Title: LAN_RTL8111H_CG

Size: Custom | Document Number: DG421 | Rev: 1.0

Date: Sunday, January 22, 2017 | Sheet 37 of 60

Vinafix.com

DL1/DL2
1'S PN:SC300003M00

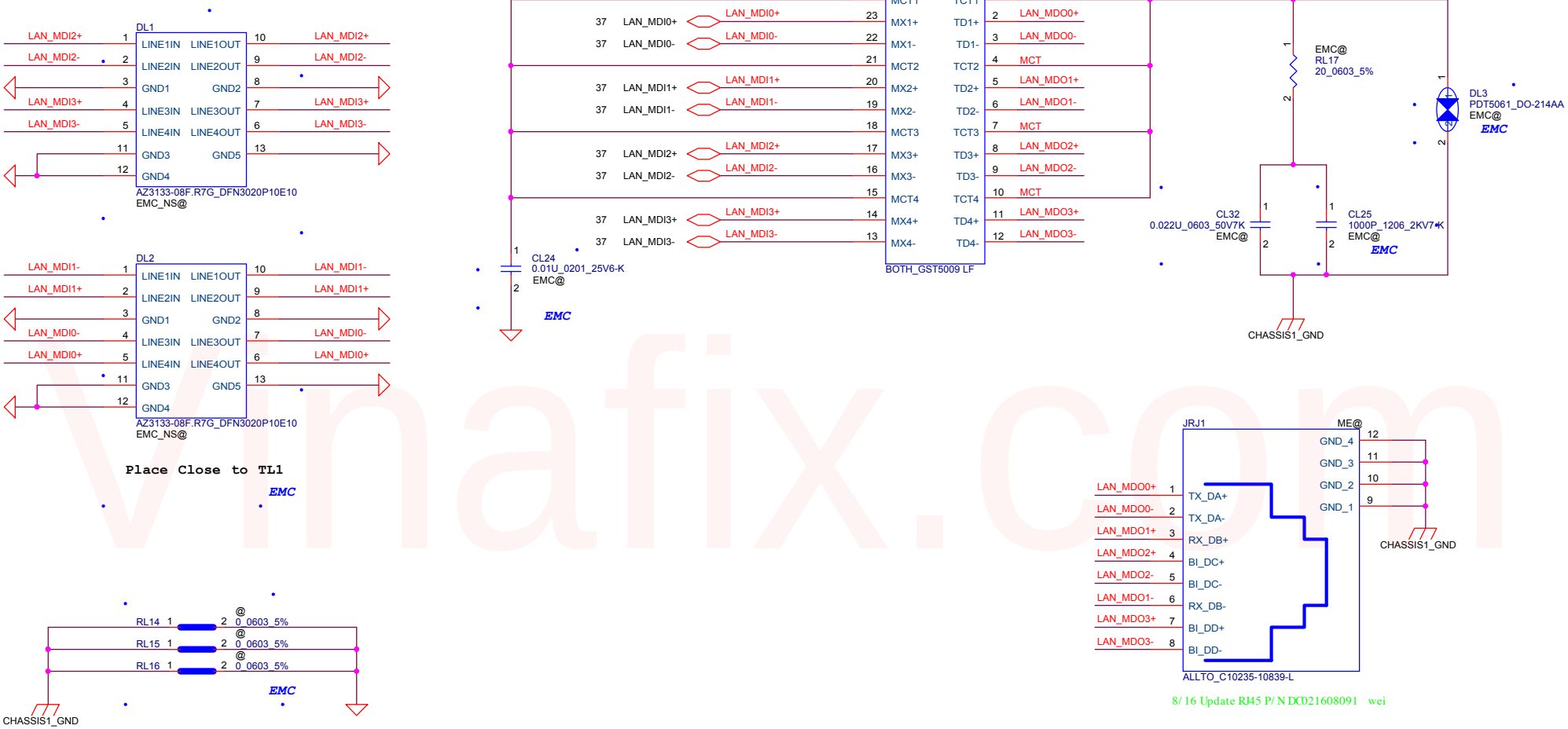

8/ 16 Update RJ45 P/ N DC021608091 wei

Security Classification	LC Future Center Secret Data		
Issued Date	2015/08/20	Deciphered Date	2016/08/20

THIS SHEET OF ENGINEERING DRAWING IS THE PROPRIETARY PROPERTY OF LC FUTURE CENTER. AND CONTAINS CONFIDENTIAL AND TRADE SECRET INFORMATION. THIS SHEET MAY NOT BE TRANSFERED FROM THE CUSTODY OF THE COMPETENT DIVISION OF R&D DEPARTMENT EXCEPT AS AUTHORIZED BY LC FUTURE CENTER NEITHER THIS SHEET NOR THE INFORMATION IT CONTAINS MAY BE USED BY OR DISCLOSED TO ANY THIRD PARTY WITHOUT PRIOR WRITTEN CONSENT OF LC FUTURE CENTER.

Title: LAN_Transformer

Size: B | Document Number: DG421 | Rev: 1.0

Date: Sunday, January 22, 2017 | Sheet 38 of 60

vinafix.com

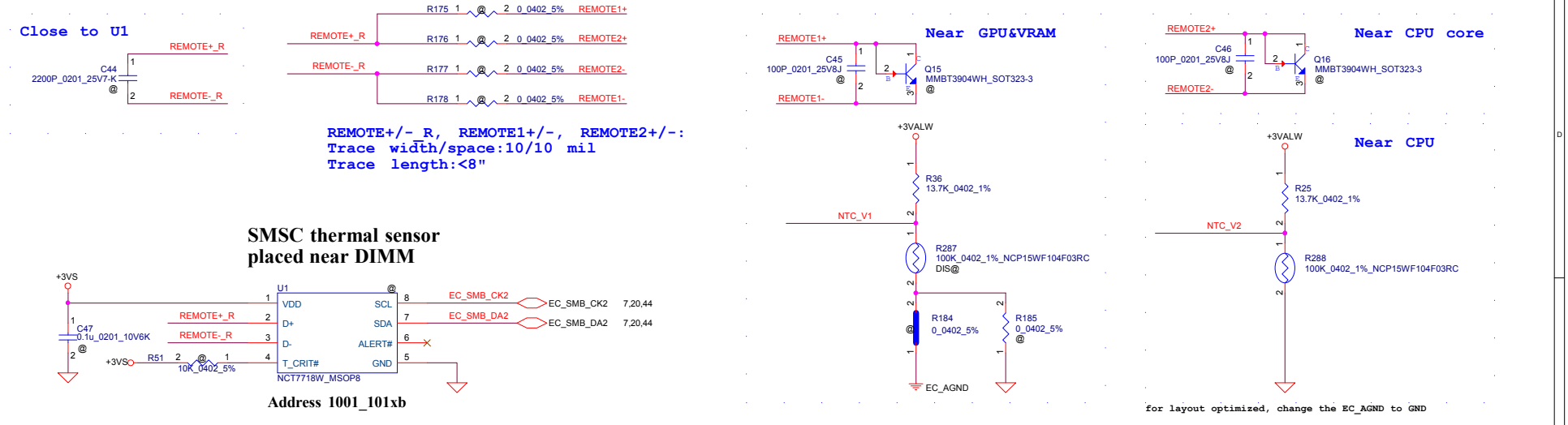

Vinafix.com

Vinafix

Security Classification	LC Future Center Secret Data		
Issued Date	2016/08/16	Deciphered Date	2017/08/15

THIS SHEET OF ENGINEERING DRAWING IS THE PROPRIETARY PROPERTY OF LC FUTURE CENTER. AND CONTAINS CONFIDENTIAL AND TRADE SECRET INFORMATION. THIS SHEET MAY NOT BE TRANSFERED FROM THE CUSTODY OF THE COMPETENT DIVISION OF R&D DEPARTMENT EXCEPT AS AUTHORIZED BY LC FUTURE CENTER NEITHER THIS SHEET NOR THE INFORMATION IT CONTAINS MAY BE USED BY OR DISCLOSED TO ANY THIRD PARTY WITHOUT PRIOR WRITTEN CONSENT OF LC FUTURE CENTER.

Title: Thermal sensor/FAN CONN

Size: Custom | Document Number: DG421 | Rev: 1.0

Date: Sunday, January 22, 2017 | Sheet 39 of 60

Mini-Express Card(WLAN/WiMAX)

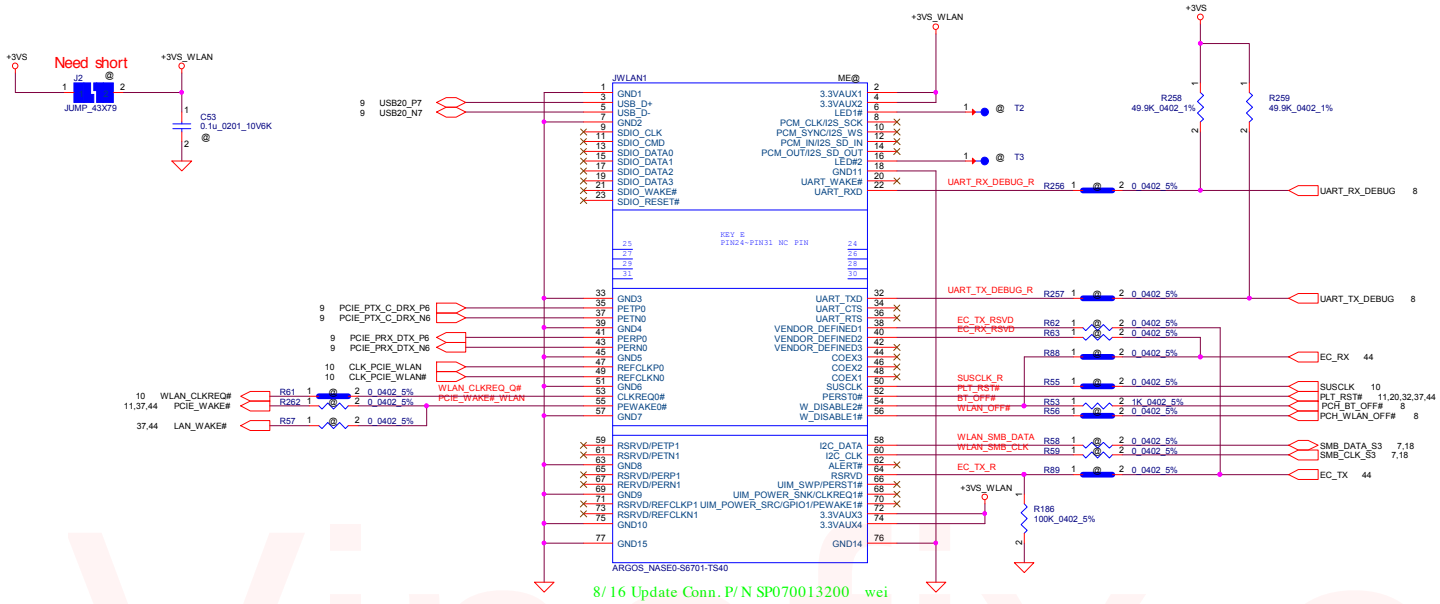

8/ 16 Update Conn. P/ N SP070013200 wei

Vinafix.com

Security Classification	LC Future Center Secret Data		
Issued Date	2015/08/20	Deciphered Date	2016/08/20

THIS SHEET OF ENGINEERING DRAWING IS THE PROPRIETARY PROPERTY OF LC FUTURE CENTER, AND CONTAINS CONFIDENTIAL AND TRADE SECRET INFORMATION. THIS SHEET MAY NOT BE TRANSFERED FROM THE CUSTODY OF THE COMPETENT DIVISION OF R&D DEPARTMENT EXCEPT AS AUTHORIZED BY LC FUTURE CENTER NEITHER THIS SHEET NOR THE INFORMATION IT CONTAINS MAY BE USED BY OR DISCLOSED TO ANY THIRD PARTY WITHOUT PRIOR WRITTEN CONSENT OF LC FUTURE CENTER.

Title: NGFF WLAN&SSD

Size: C | Document Number: DG421 | Rev: 1.0

Date: Sunday, January 22, 2017 | Sheet 40 of 60

LEFT SIDE USB3.0 PORT x2

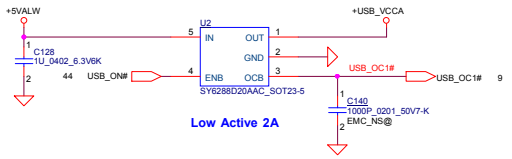

Low Active 2A

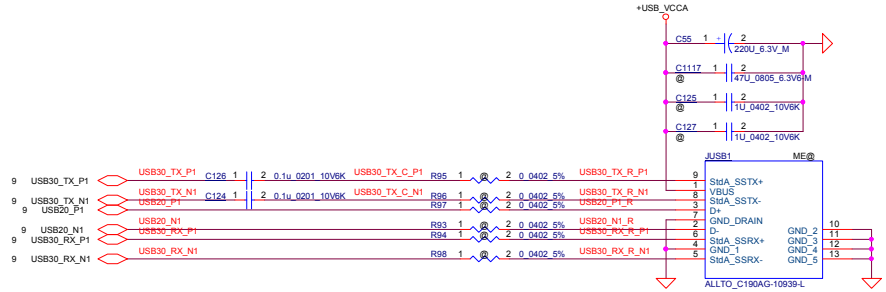

09/05 Update USBConn. P/N DC021609011 wei

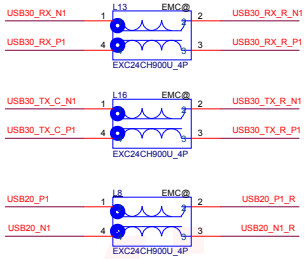

EMC

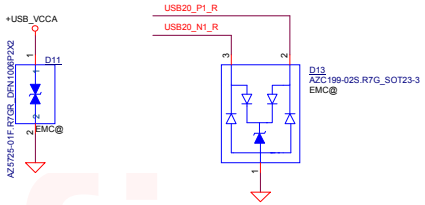

EMC

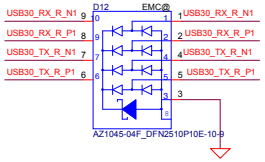

Vinafix.com

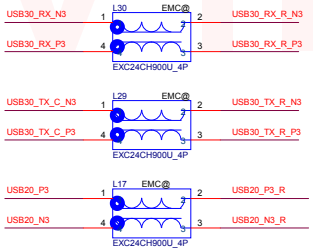

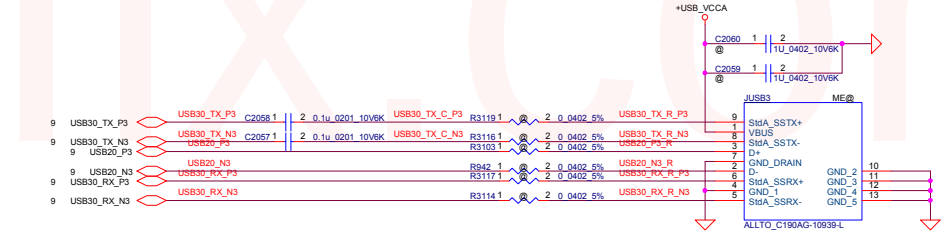

09/05 Update USBConn. P/N DC021609011 wei

FOR ESD

Close to Connector

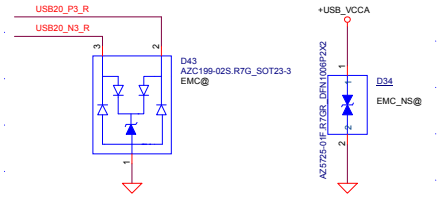

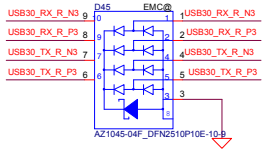

Security Classification	LC Future Center Secret Data		
Issued Date	2015/08/20	Deciphered Date	2016/08/20

THIS SHEET OF ENGINEERING DRAWING IS THE PROPRIETARY PROPERTY OF LC FUTURE CENTER, AND CONTAINS CONFIDENTIAL AND TRADE SECRET INFORMATION. THIS SHEET MAY NOT BE TRANSFERED FROM THE CUSTODY OF THE COMPETENT DIVISION OF R&D DEPARTMENT EXCEPT AS AUTHORIZED BY LC FUTURE CENTER NEITHER THIS SHEET NOR THE INFORMATION IT CONTAINS MAY BE USED BY OR DISCLOSED TO ANY THIRD PARTY WITHOUT PRIOR WRITTEN CONSENT OF LC FUTURE CENTER.

Title: USB3.0 PORT (LEFT)

Size: C | Document Number: DG421 | Rev: 1.0

Date: Sunday, January 22, 2017 | Sheet 41 of 60

SATA HDD Conn.

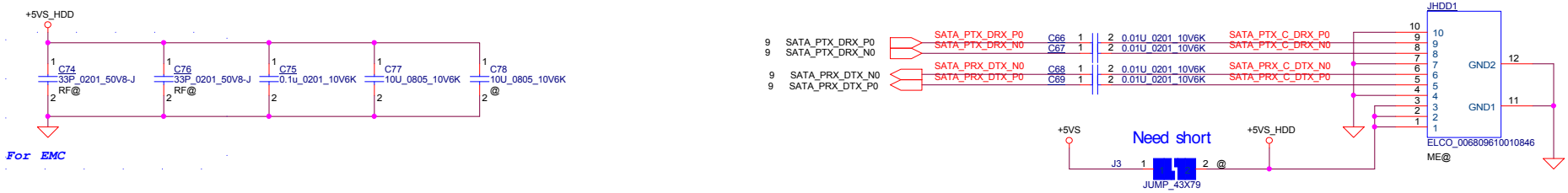

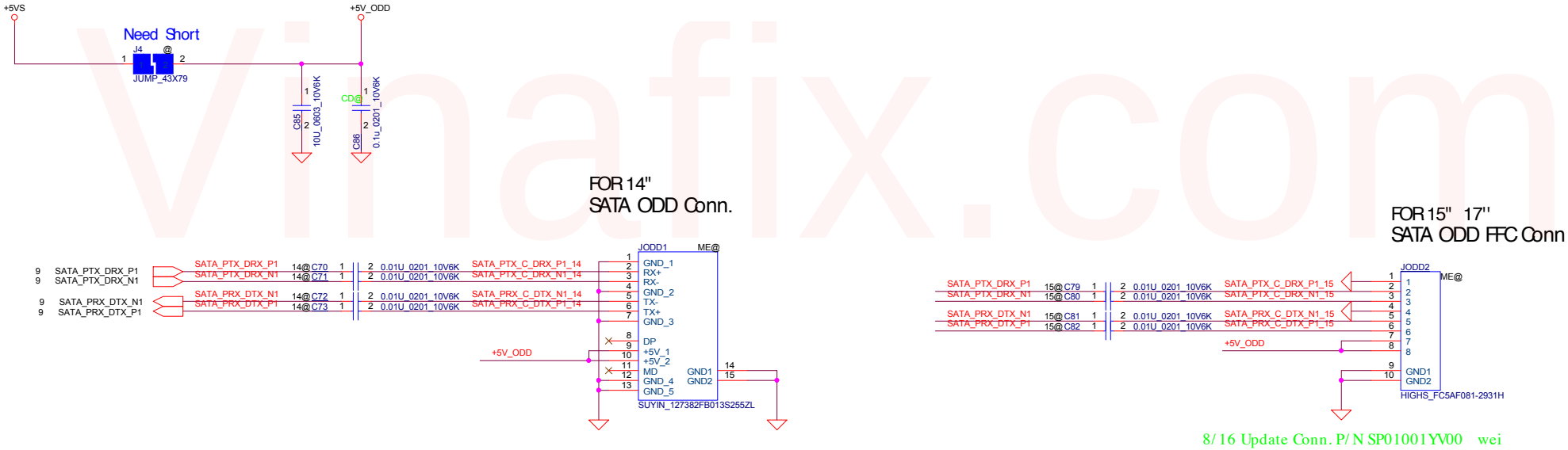

8/16 Update Conn. P/N SP01001YV00 wei

Vinafix.com

Security Classification	LC Future Center Secret Data		
Issued Date	2015/08/20	Deciphered Date	2016/08/20

THIS SHEET OF ENGINEERING DRAWING IS THE PROPRIETARY PROPERTY OF LC FUTURE CENTER. AND CONTAINS CONFIDENTIAL AND TRADE SECRET INFORMATION. THIS SHEET MAY NOT BE TRANSFERED FROM THE CUSTODY OF THE COMPETENT DIVISION OF R&D DEPARTMENT EXCEPT AS AUTHORIZED BY LC FUTURE CENTER NEITHER THIS SHEET NOR THE INFORMATION IT CONTAINS MAY BE USED BY OR DISCLOSED TO ANY THIRD PARTY WITHOUT PRIOR WRITTEN CONSENT OF LC FUTURE CENTER.

Title: **HDD/ODD CONN**

Size: Custom | Document Number: DG421 | Rev: 1.0

Date: Sunday, January 22, 2017 | Sheet 42 of 60

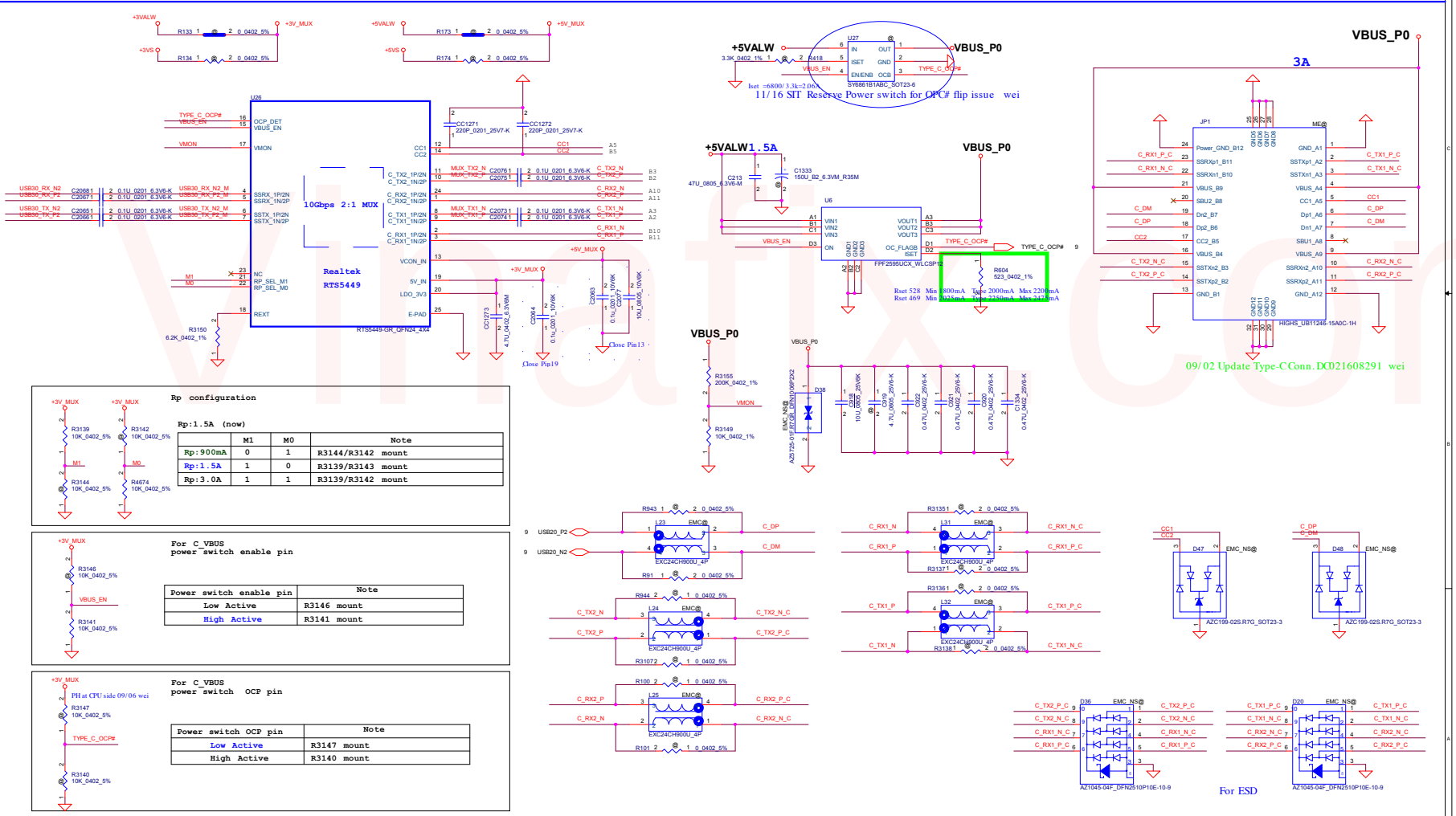

	M1	M0	Note
Rp:900mA	0	1	R3144/R3142 mount
Rp:1.5A	1	0	R3139/R3143 mount
Rp:3.0A	1	1	R3139/R3142 mount

Power switch enable pin	Note
Low Active	R3146 mount
High Active	R3141 mount

Power switch OCP pin	Note
Low Active	R3147 mount
High Active	R3140 mount

Security Classification	LC Future Center Secret Data		
Issued Date	2015/08/20	Deciphered Date	2016/08/20

THIS SHEET OF ENGINEERING DRAWING IS THE PROPRIETARY PROPERTY OF LC FUTURE CENTER, AND CONTAINS CONFIDENTIAL AND TRADE SECRET INFORMATION. THIS SHEET MAY NOT BE TRANSFERRED FROM THE CUSTODY OF THE COMPETENT DIVISION OF R&D DEPARTMENT, EXCEPT AS AUTHORIZED BY LC FUTURE CENTER. NEITHER THIS SHEET NOR THE INFORMATION IT CONTAINS MAY BE USED BY OR DISCLOSED TO ANY THIRD PARTY WITHOUT PRIOR WRITTEN CONSENT OF LC FUTURE CENTER.

Title: 3D Camera

Size: Custom | Document Number: DG421 | Rev: 1.0

Date: Sunday, January 22, 2017 | Sheet 43 of 60

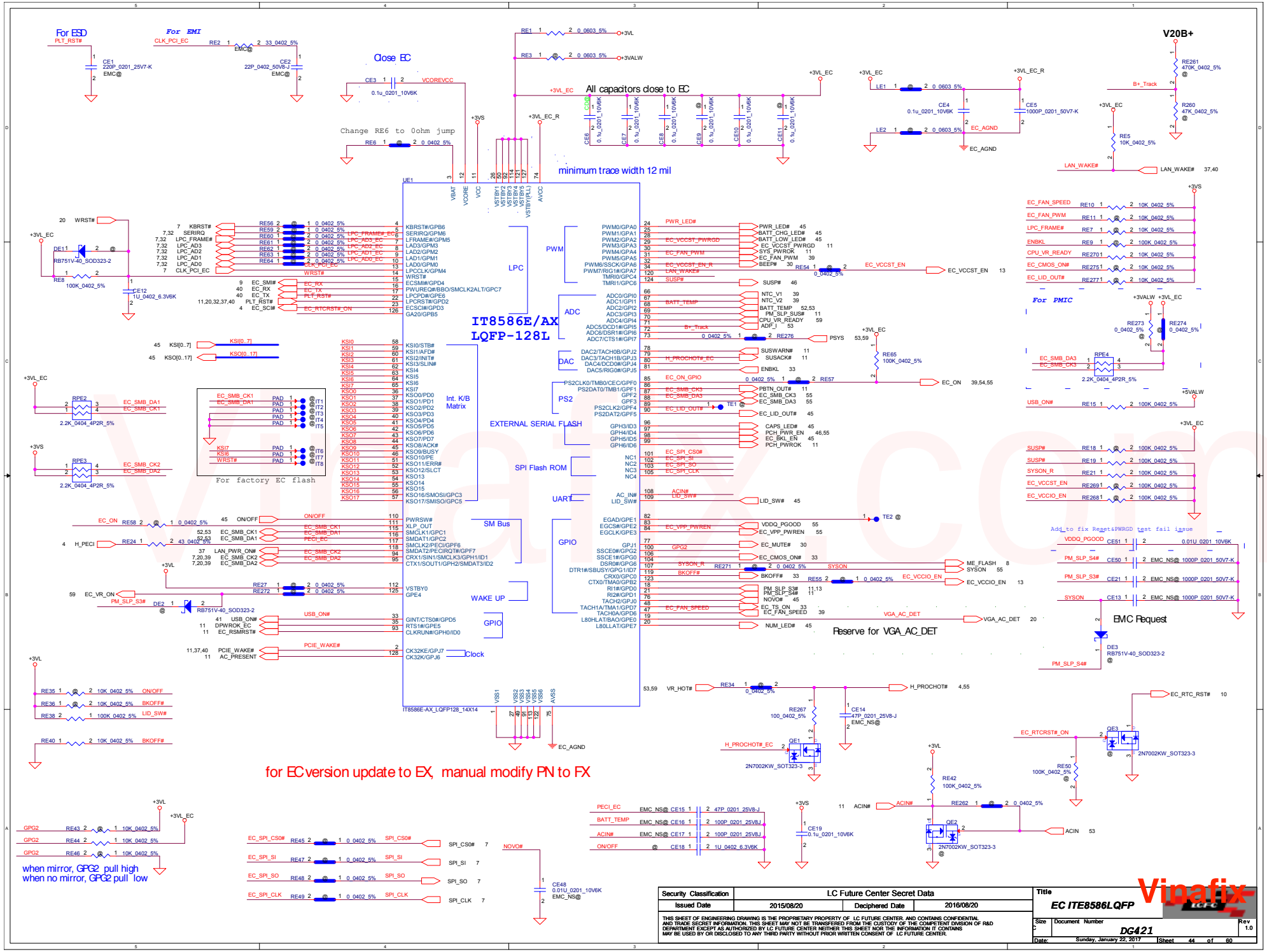
For ESD
For EMI
Close EC
Change RE6 to 0ohm jump
All capacitors close to EC
minimum trace width 12 mil
V20B+
IT8586E/AX
LQFP-128L
LPC
PWM
ADC
DAC
PS2
EXTERNAL SERIAL FLASH
SPI Flash ROM
UART
GPIO
SM Bus
WAKE UP
Clock
Int. K/B Matrix
For PMIC
For factory EC flash
EMC Request
Reserve for VGA_AC_DET
for EC version update to EX, manual modify PN to FX
when mirror, GPG2 pull high
when no mirror, GPG2 pull low
Add to fix Reset&PWRGD test fail issue
Security Classification
LC Future Center Secret Data
Issued Date
2015/08/20
Deciphered Date
2016/08/20
Title
EC ITE8586LQFP
Size
C
Document Number
DG421
Rev
1.0
Date:
Sunday, January 22, 2017
Sheet
44
of
60

ON/OFF switch

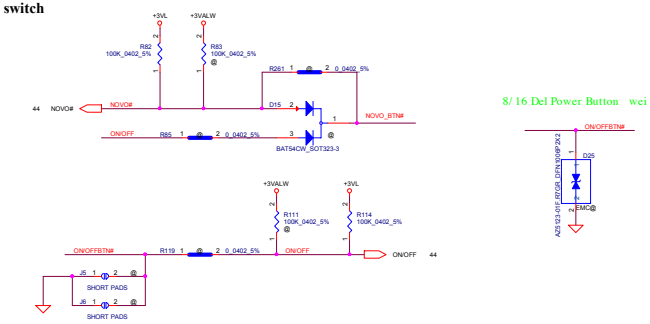

8/16 Del Power Button wei

Novo button

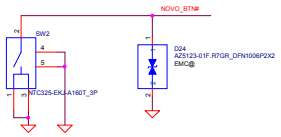

8/31 Update the P/N SN100008W00 wei

LID switch

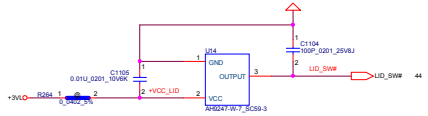

K/B Connector

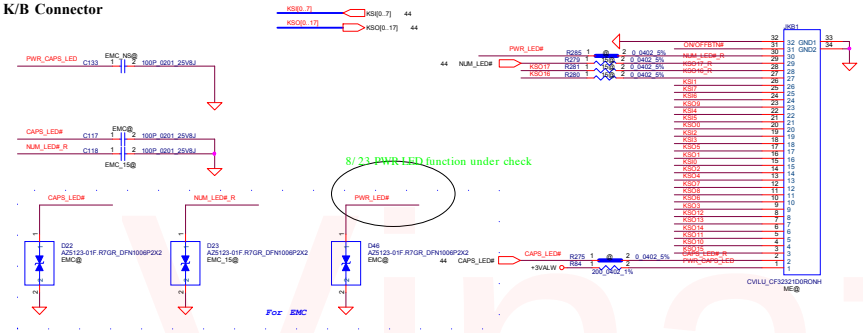

8/23 PWR LED function under check

KB Backlight Connector

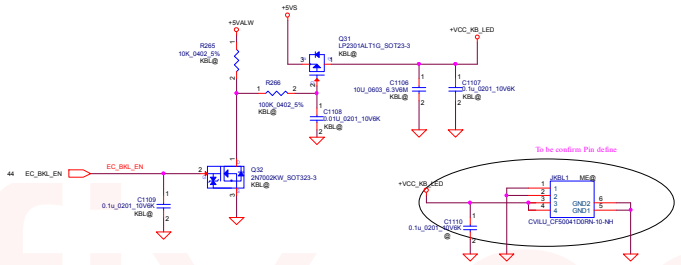

8/31 Update KBL Conn. P/N SP011608241 wei

Finger Print Connector

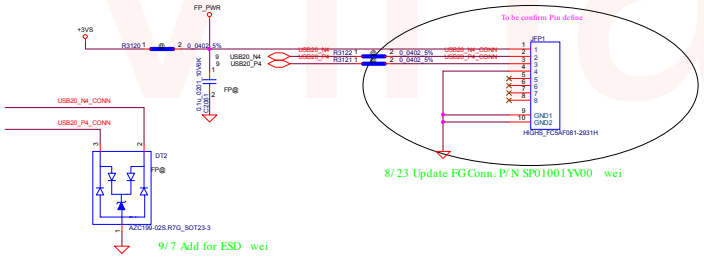

8/23 Update FG Conn. P/N SP01001YV00 wei

9/7 Add for ESD wei

TP/B Connector

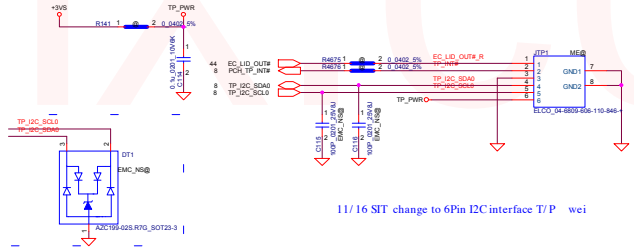

11/16 SIT change to 6Pin I2C interface T/P wei

Security Classification	LC Future Center Secret Data		
Issued Date	2015/08/20	Deciphered Date	2016/08/20

THIS SHEET OF ENGINEERING DRAWING IS THE PROPRIETARY PROPERTY OF LC FUTURE CENTER, AND CONTAINS CONFIDENTIAL AND TRADE SECRET INFORMATION. THIS SHEET MAY NOT BE TRANSFERRED FROM THE CUSTODY OF THE COMPETENT DIVISION OF R&D DEPARTMENT EXCEPT AS AUTHORIZED BY LC FUTURE CENTER NEITHER THIS SHEET NOR THE INFORMATION IT CONTAINS MAY BE USED BY OR DISCLOSED TO ANY THIRD PARTY WITHOUT PRIOR WRITTEN CONSENT OF LC FUTURE CENTER.

Title: KBD/PWR/IO/LED/TP Conn

Size	Document Number	Rev
Date:	DG421	1.0
	Sunday, January 22, 2017	Sheet 45 of 60

Vinafix.com

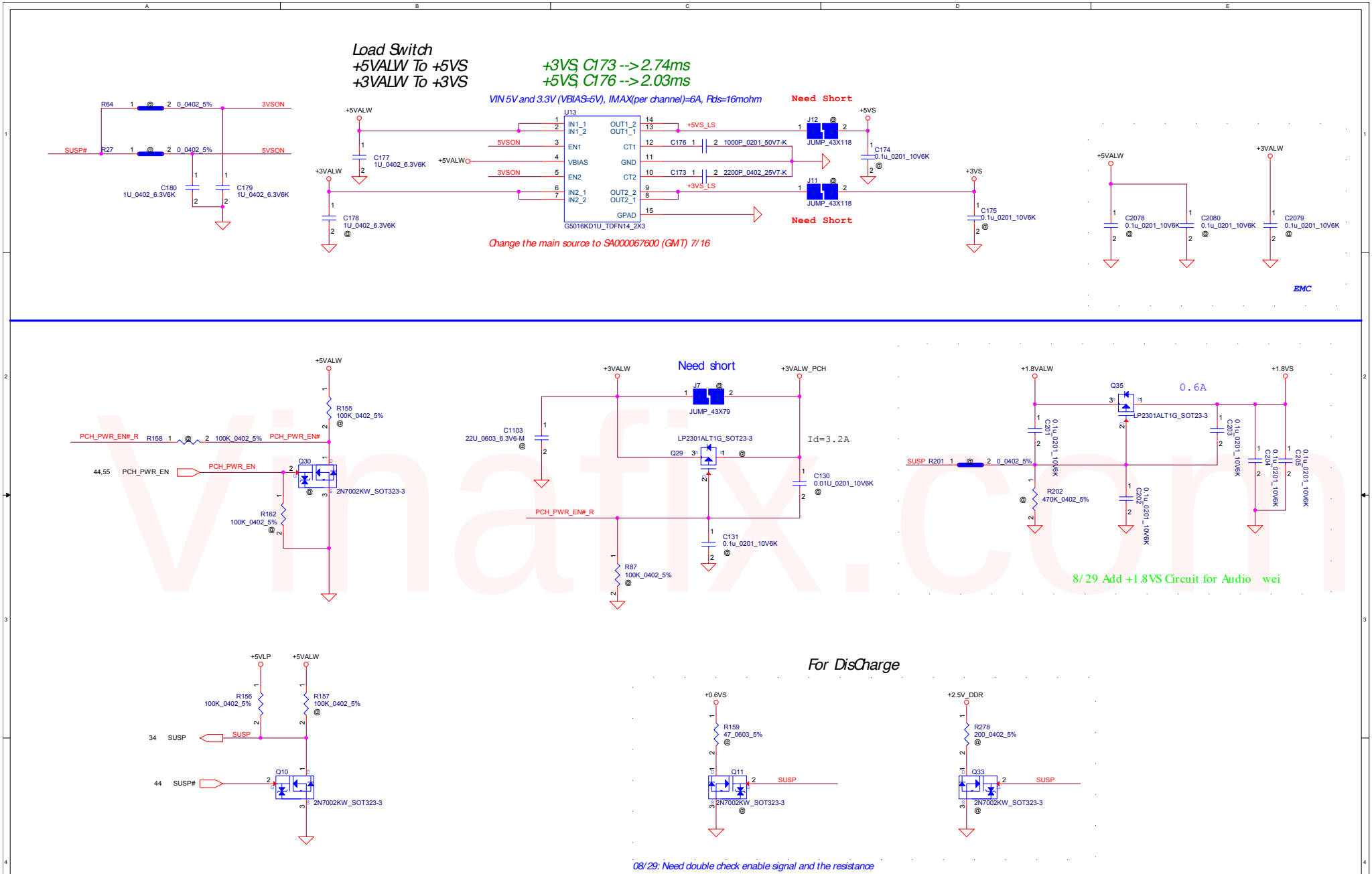

Vinafix.com

Security Classification	LC Future Center Secret Data		
Issued Date	2015/08/20	Deciphered Date	2016/08/20

THIS SHEET OF ENGINEERING DRAWING IS THE PROPRIETARY PROPERTY OF LC FUTURE CENTER. AND CONTAINS CONFIDENTIAL AND TRADE SECRET INFORMATION. THIS SHEET MAY NOT BE TRANSFERED FROM THE CUSTODY OF THE COMPETENT DIVISION OF R&D DEPARTMENT EXCEPT AS AUTHORIZED BY LC FUTURE CENTER NEITHER THIS SHEET NOR THE INFORMATION IT CONTAINS MAY BE USED BY OR DISCLOSED TO ANY THIRD PARTY WITHOUT PRIOR WRITTEN CONSENT OF LC FUTURE CENTER.

Title: DC V TO VS INTERFACE

Size: Custom | Document Number: DG421 | Rev: 1.0

Date: Sunday, January 22, 2017 | Sheet 46 of 60

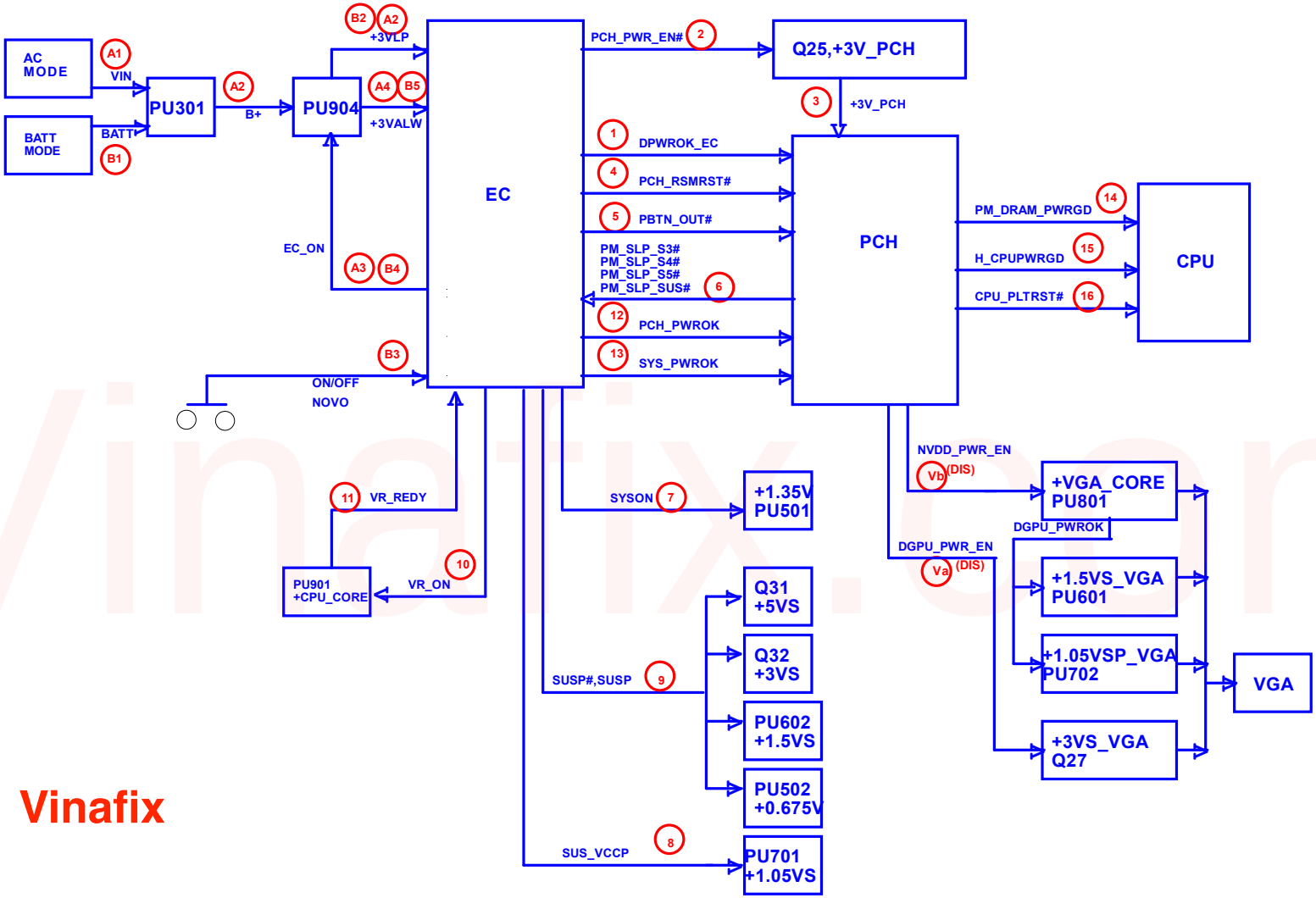

Vinafix.com

Vinafix

Security Classification	LC Future Center Secret Data		
Issued Date	2015/08/20	Deciphered Date	2016/08/20

THIS SHEET OF ENGINEERING DRAWING IS THE PROPRIETARY PROPERTY OF LC FUTURE CENTER. AND CONTAINS CONFIDENTIAL AND TRADE SECRET INFORMATION. THIS SHEET MAY NOT BE TRANSFERED FROM THE CUSTODY OF THE COMPETENT DIVISION OF R&D DEPARTMENT EXCEPT AS AUTHORIZED BY LC FUTURE CENTER NEITHER THIS SHEET NOR THE INFORMATION IT CONTAINS MAY BE USED BY OR DISCLOSED TO ANY THIRD PARTY WITHOUT PRIOR WRITTEN CONSENT OF LC FUTURE CENTER.

Title: **Power sequence block**

Size: Custom | Document Number: DG421 | Rev: 1.0

Date: Sunday, January 22, 2017 | Sheet 47 of 60

Vinafix.com

Security Classification	LC Future Center Secret Data		
Issued Date	2015/08/20	Deciphered Date	2016/08/20

THIS SHEET OF ENGINEERING DRAWING IS THE PROPRIETARY PROPERTY OF LC FUTURE CENTER, AND CONTAINS CONFIDENTIAL AND TRADE SECRET INFORMATION. THIS SHEET MAY NOT BE TRANSFERED FROM THE CUSTODY OF THE COMPETENT DIVISION OF R&D DEPARTMENT EXCEPT AS AUTHORIZED BY LC FUTURE CENTER NEITHER THIS SHEET NOR THE INFORMATION IT CONTAINS MAY BE USED BY OR DISCLOSED TO ANY THIRD PARTY WITHOUT PRIOR WRITTEN CONSENT OF LC FUTURE CENTER.

Title

Virtual symbol

Size	Document Number	Rev
C	DG421	1.0

Date: Sunday, January 22, 2017 Sheet 48 of 60

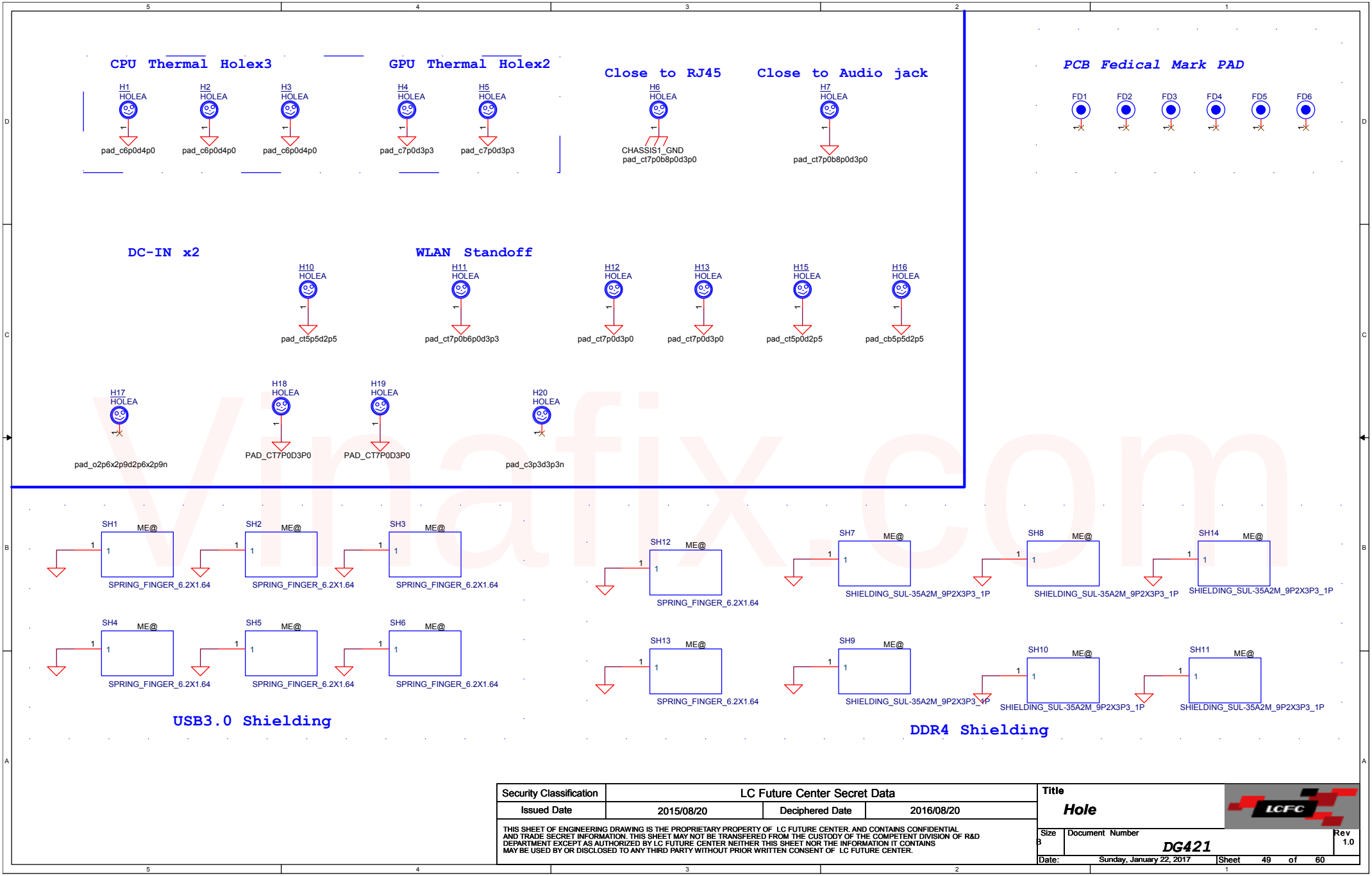

vinafix.com

Security Classification	LC Future Center Secret Data		
Issued Date	2015/08/20	Deciphered Date	2016/08/20

THIS SHEET OF ENGINEERING DRAWING IS THE PROPRIETARY PROPERTY OF LC FUTURE CENTER. AND CONTAINS CONFIDENTIAL AND TRADE SECRET INFORMATION. THIS SHEET MAY NOT BE TRANSFERED FROM THE CUSTODY OF THE COMPETENT DIVISION OF R&D DEPARTMENT EXCEPT AS AUTHORIZED BY LC FUTURE CENTER NEITHER THIS SHEET NOR THE INFORMATION IT CONTAINS MAY BE USED BY OR DISCLOSED TO ANY THIRD PARTY WITHOUT PRIOR WRITTEN CONSENT OF LC FUTURE CENTER.

Title: **Hole**

Size: B | Document Number: DG421 | Rev: 1.0

Date: Sunday, January 22, 2017 | Sheet 49 of 60

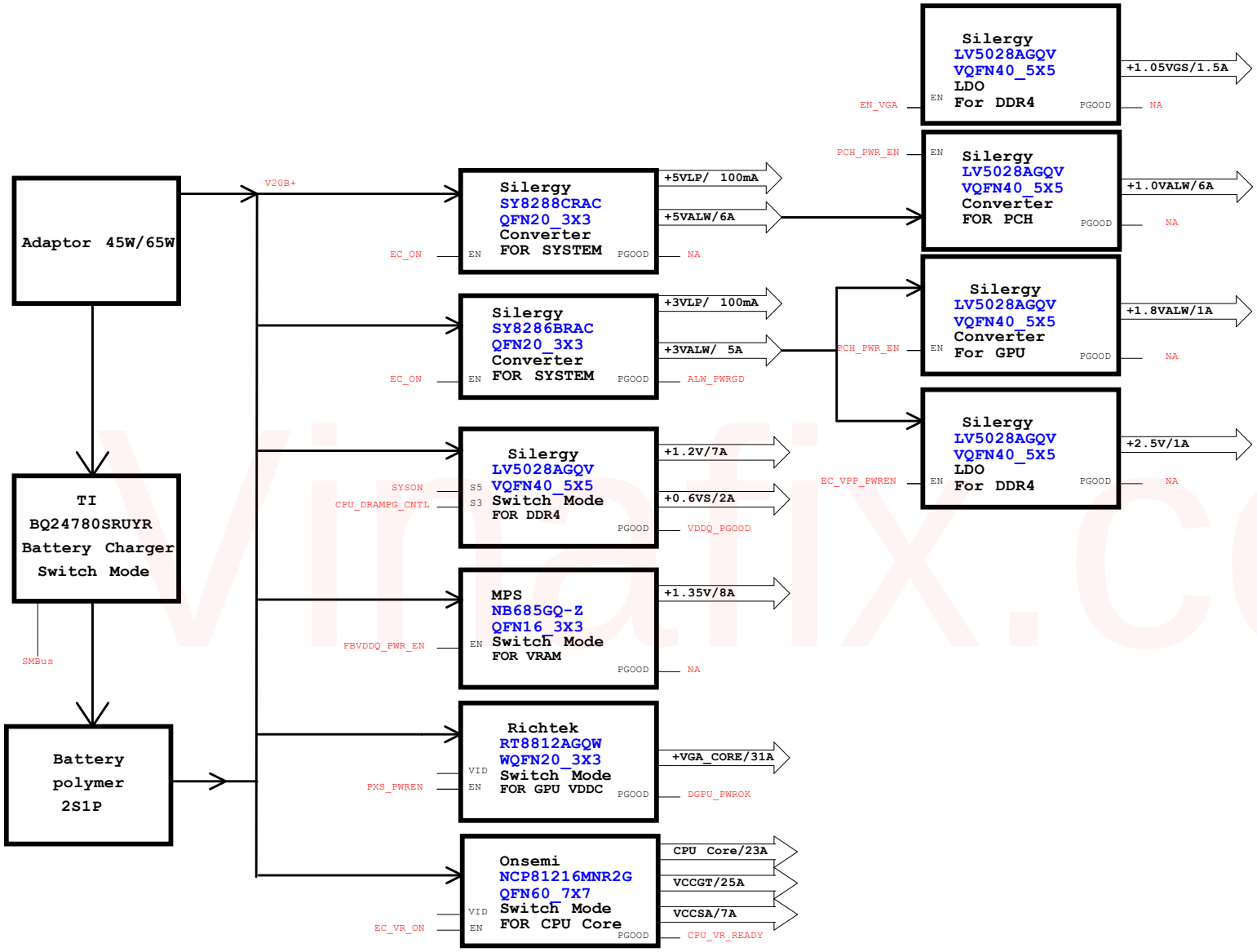

Viralix.com

Security Classification	LC Future Center Secret Data		
Issued Date	2015/08/20	Deciphered Date	2016/08/20

THIS SHEET OF ENGINEERING DRAWING IS THE PROPRIETARY PROPERTY OF LC FUTURE CENTER, AND CONTAINS CONFIDENTIAL AND TRADE SECRET INFORMATION. THIS SHEET MAY NOT BE TRANSFERED FROM THE CUSTODY OF THE COMPETENT DIVISION OF R&D DEPARTMENT EXCEPT AS AUTHORIZED BY LC FUTURE CENTER NEITHER THIS SHEET NOR THE INFORMATION IT CONTAINS MAY BE USED BY OR DISCLOSED TO ANY THIRD PARTY WITHOUT PRIOR WRITTEN CONSENT OF LC FUTURE CENTER.

Title: **PWR-Power Diagram**

Size: Custom | Document Number: DG421 | Rev: 1.0

Date: Sunday, January 22, 2017 | Sheet 50 of 60

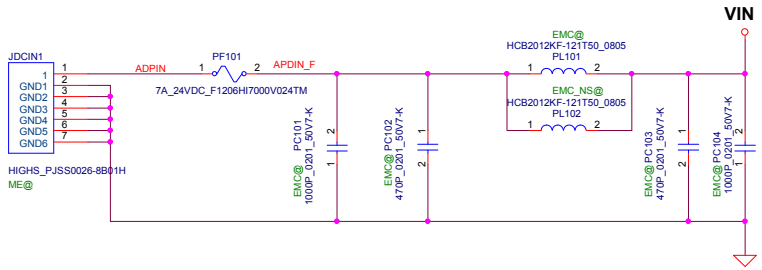

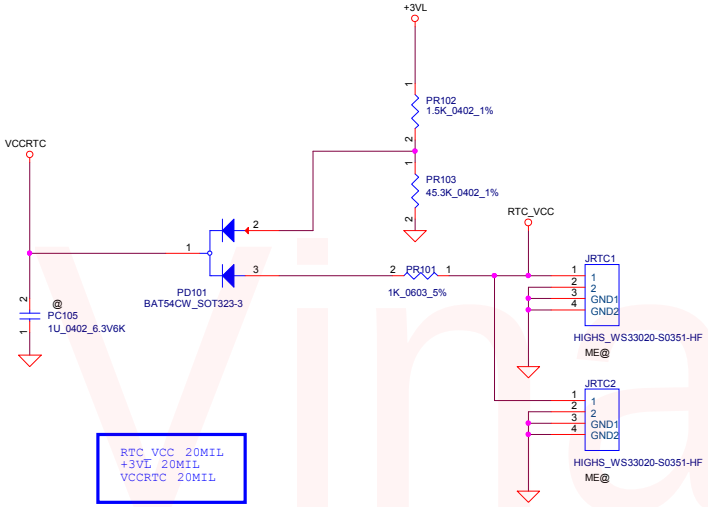

RTC_VCC 20MIL
+3VL 20MIL
VCCRTC 20MIL

No charge RTC with 35mm cable

RTC Battery for GCM BOM
(2nd source and quoted price)

Vinafix.com

Security Classification	LC Future Center Secret Data		
Issued Date	2015/08/20	Deciphered Date	2016/08/20

THIS SHEET OF ENGINEERING DRAWING IS THE PROPRIETARY PROPERTY OF LC FUTURE CENTER. AND CONTAINS CONFIDENTIAL AND TRADE SECRET INFORMATION. THIS SHEET MAY NOT BE TRANSFERED FROM THE CUSTODY OF THE COMPETENT DIVISION OF R&D DEPARTMENT EXCEPT AS AUTHORIZED BY LC FUTURE CENTER NEITHER THIS SHEET NOR THE INFORMATION IT CONTAINS MAY BE USED BY OR DISCLOSED TO ANY THIRD PARTY WITHOUT PRIOR WRITTEN CONSENT OF LC FUTURE CENTER.

Title: **PWR-DCIN / RTC charger**

Size: Custom | Document Number: DG421 | Rev: 1.0

Date: Sunday, January 22, 2017 | Sheet 51 of 60

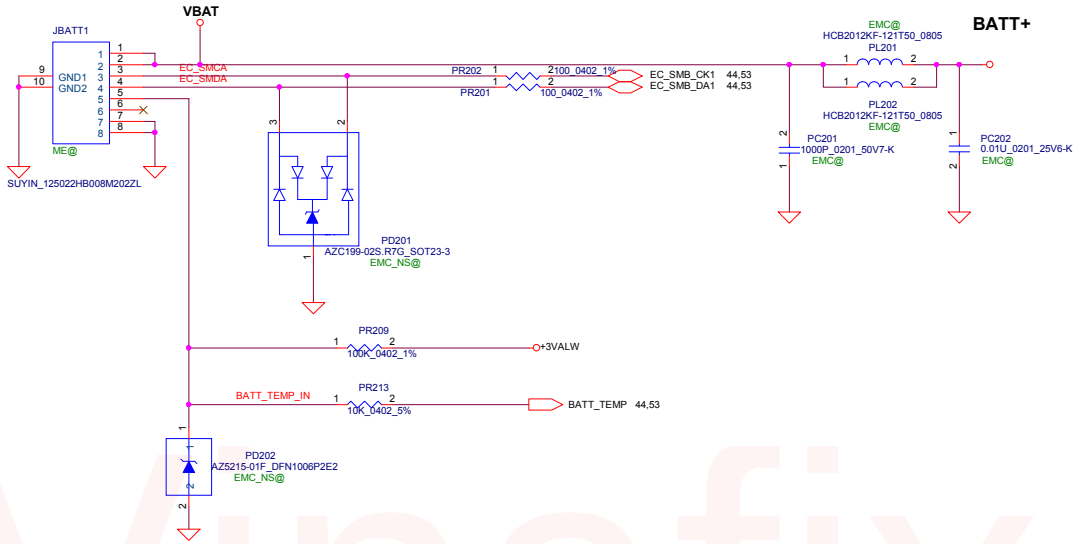

2S1P polymer battery voltage level: +6V ~ 8.4 V

Vinafix.com

Security Classification	LC Future Center Secret Data		
Issued Date	2015/08/20	Deciphered Date	2016/08/20

THIS SHEET OF ENGINEERING DRAWING IS THE PROPRIETARY PROPERTY OF LC FUTURE CENTER. AND CONTAINS CONFIDENTIAL AND TRADE SECRET INFORMATION. THIS SHEET MAY NOT BE TRANSFERED FROM THE CUSTODY OF THE COMPETENT DIVISION OF R&D DEPARTMENT EXCEPT AS AUTHORIZED BY LC FUTURE CENTER NEITHER THIS SHEET NOR THE INFORMATION IT CONTAINS MAY BE USED BY OR DISCLOSED TO ANY THIRD PARTY WITHOUT PRIOR WRITTEN CONSENT OF LC FUTURE CENTER.

Title: **PWR-BATTERY CONN/OTP**

Size: Custom | Document Number: DG421 | Rev: 1.0

Date: Sunday, January 22, 2017 | Sheet 52 of 60

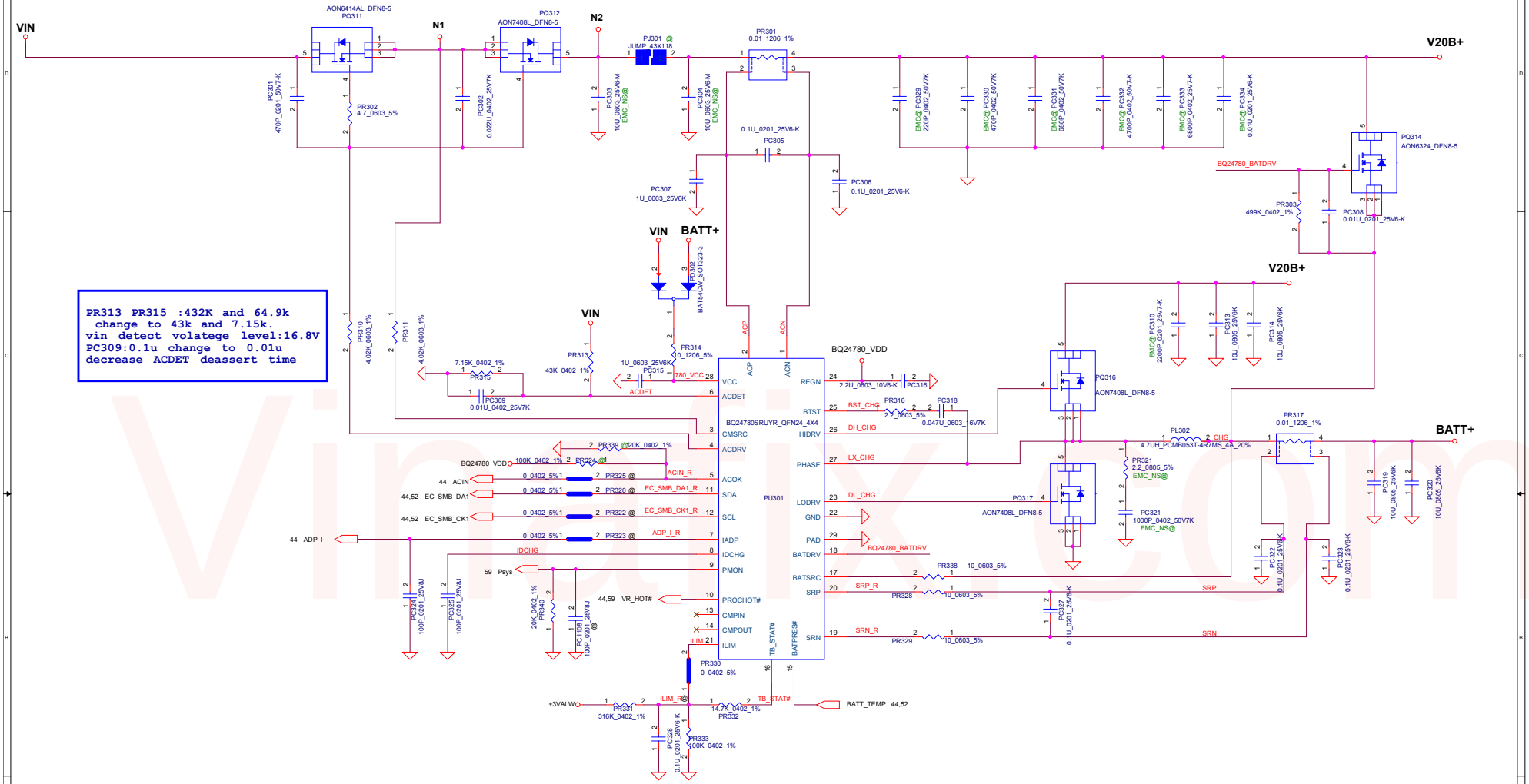

Security Classification	LC Future Center Secret Data		
Issued Date	2015/08/20	Deciphered Date	2016/08/20

THIS SHEET OF ENGINEERING DRAWING IS THE PROPRIETARY PROPERTY OF LC FUTURE CENTER, AND CONTAINS CONFIDENTIAL AND TRADE SECRET INFORMATION. THIS SHEET MAY NOT BE TRANSFERED FROM THE CUSTODY OF THE COMPETENT DIVISION OF R&D DEPARTMENT EXCEPT AS AUTHORIZED BY LC FUTURE CENTER NEITHER THIS SHEET NOR THE INFORMATION IT CONTAINS MAY BE USED BY OR DISCLOSED TO ANY THIRD PARTY WITHOUT PRIOR WRITTEN CONSENT OF LC FUTURE CENTER.

Title: **PWR-CHARGER**

Size: C | Document Number: **DG421** | Rev: 1.0

Date: Sunday, January 22, 2017 | Sheet 53 of 60

Vinafix.com

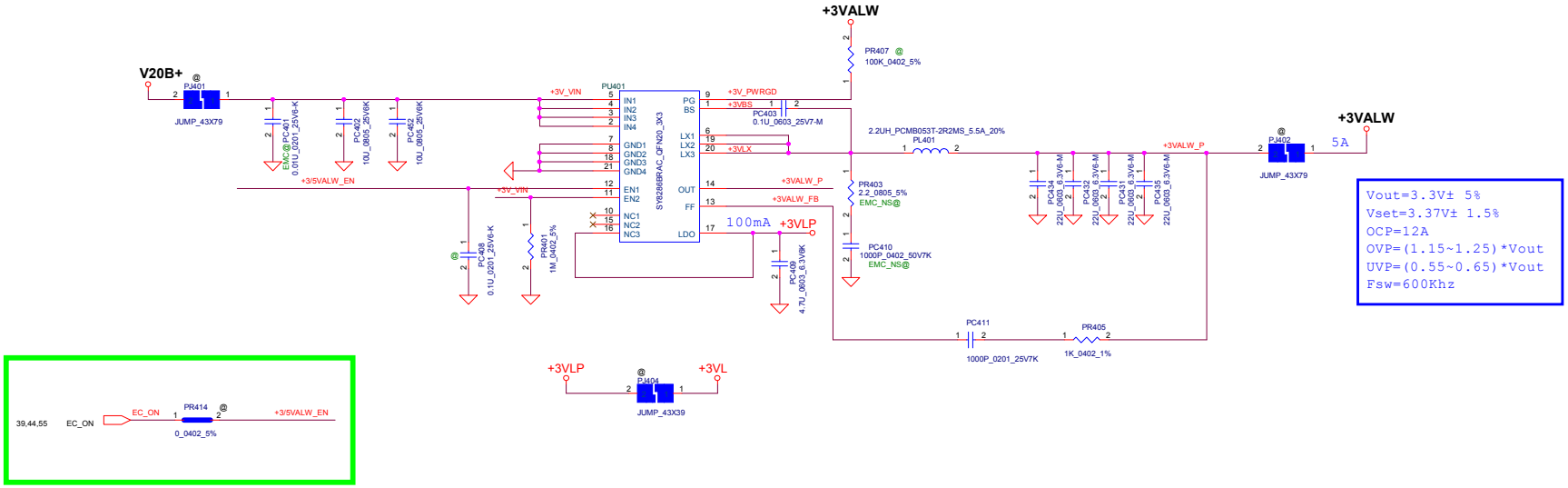

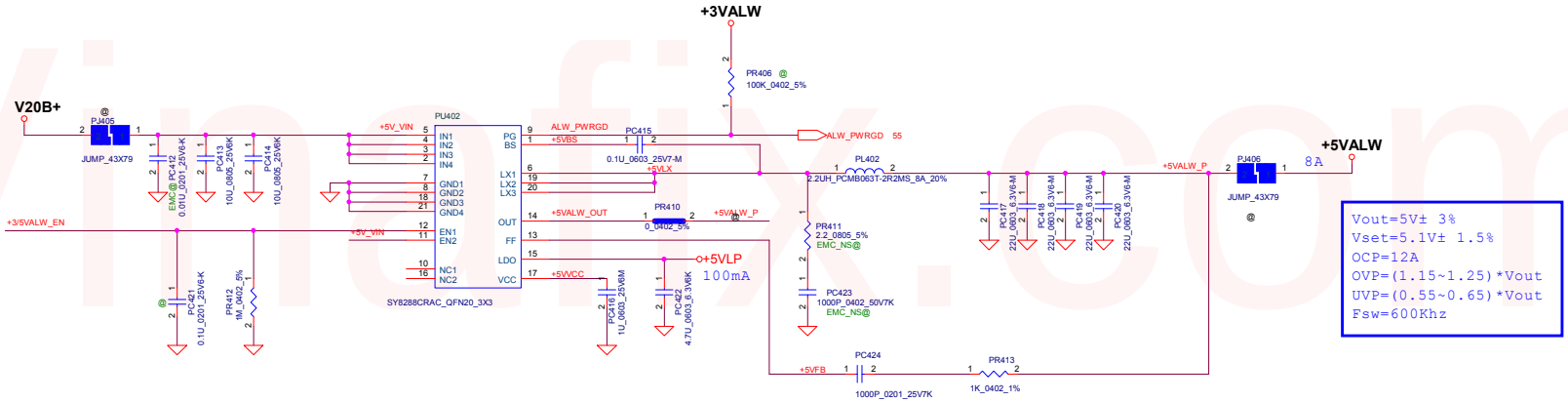

Vinafix.com

Security Classification	LC Future Center Secret Data		
Issued Date	2015/08/20	Deciphered Date	2016/08/20

THIS SHEET OF ENGINEERING DRAWING IS THE PROPRIETARY PROPERTY OF LC FUTURE CENTER, AND CONTAINS CONFIDENTIAL AND TRADE SECRET INFORMATION. THIS SHEET MAY NOT BE TRANSFERED FROM THE CUSTODY OF THE COMPETENT DIVISION OF R&D DEPARTMENT EXCEPT AS AUTHORIZED BY LC FUTURE CENTER NEITHER THIS SHEET NOR THE INFORMATION IT CONTAINS MAY BE USED BY OR DISCLOSED TO ANY THIRD PARTY WITHOUT PRIOR WRITTEN CONSENT OF LC FUTURE CENTER.

Title: PWR_3VALW/5VALW

Size: C | Document Number: DG421 | Rev: 1.0

Date: Sunday, January 22, 2017 | Sheet 54 of 60

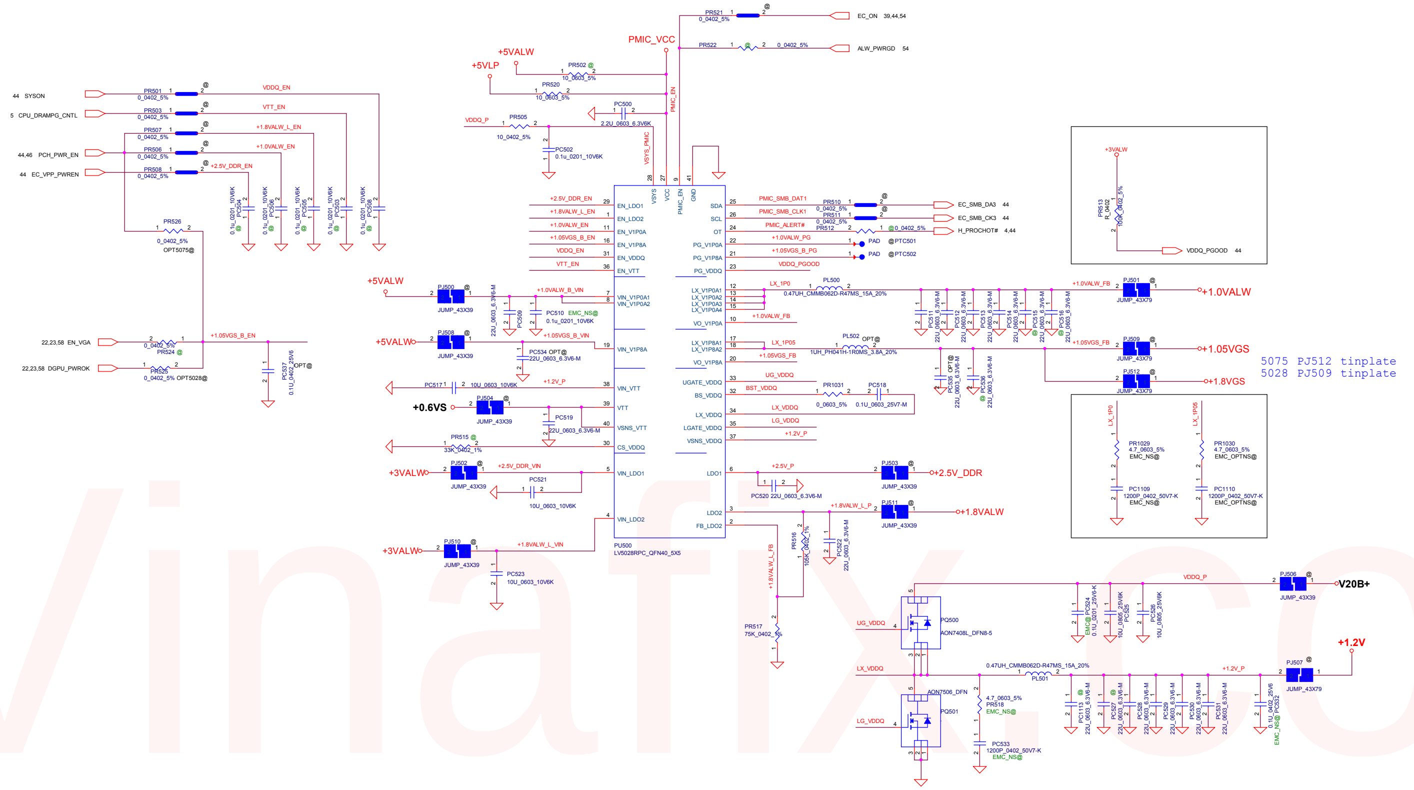

Security Classification	LC Future Center Secret Data		
Issued Date	2015/08/20	Deciphered Date	2016/08/20

THIS SHEET OF ENGINEERING DRAWING IS THE PROPRIETARY PROPERTY OF LC FUTURE CENTER. AND CONTAINS CONFIDENTIAL AND TRADE SECRET INFORMATION. THIS SHEET MAY NOT BE TRANSFERED FROM THE CUSTODY OF THE COMPETENT DIVISION OF R&D DEPARTMENT EXCEPT AS AUTHORIZED BY LC FUTURE CENTER NEITHER THIS SHEET NOR THE INFORMATION IT CONTAINS MAY BE USED BY OR DISCLOSED TO ANY THIRD PARTY WITHOUT PRIOR WRITTEN CONSENT OF LC FUTURE CENTER.

Title: **PWR PMIC-DDR4/1.0ALW/1**

Size	Document Number	Rev
D	DG421	1.0

Date: Sunday, January 22, 2017 | Sheet 55 of 60

Vinafix.com

Security Classification	LC Future Center Secret Data		
Issued Date	2015/08/20	Deciphered Date	2016/08/20

THIS SHEET OF ENGINEERING DRAWING IS THE PROPRIETARY PROPERTY OF LC FUTURE CENTER, AND CONTAINS CONFIDENTIAL AND TRADE SECRET INFORMATION. THIS SHEET MAY NOT BE TRANSFERED FROM THE CUSTODY OF THE COMPETENT DIVISION OF R&D DEPARTMENT EXCEPT AS AUTHORIZED BY LC FUTURE CENTER NEITHER THIS SHEET NOR THE INFORMATION IT CONTAINS MAY BE USED BY OR DISCLOSED TO ANY THIRD PARTY WITHOUT PRIOR WRITTEN CONSENT OF LC FUTURE CENTER.

Title

PWR

Size Custom	Document Number DG421	Rev 1.0
Date: Sunday, January 22, 2017	Sheet 56 of 60	

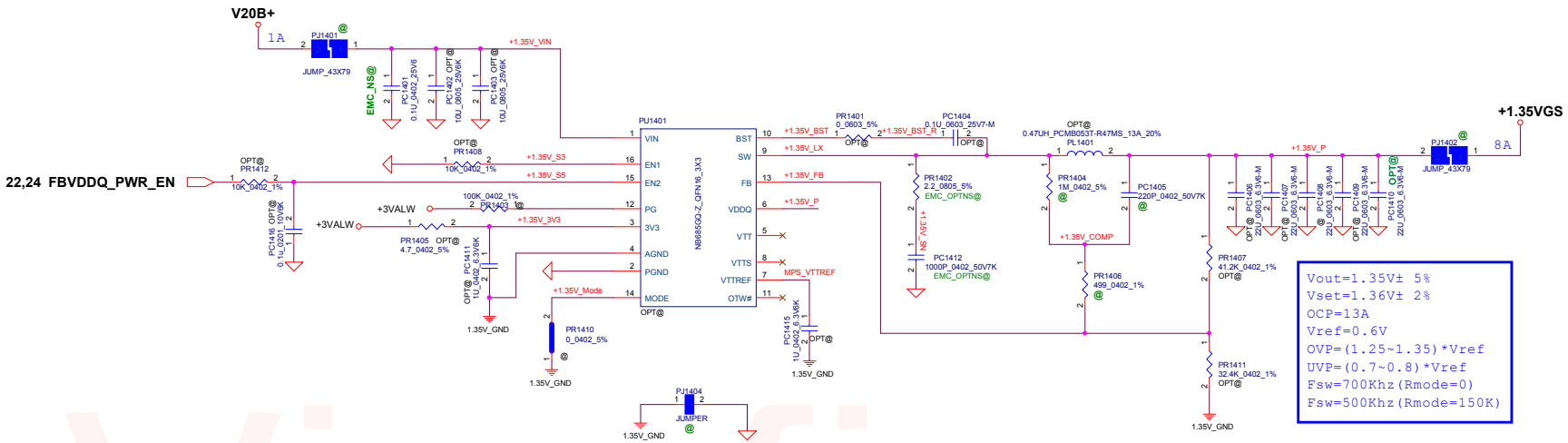

Vout=1.35V± 5%
Vset=1.36V± 2%
OCP=13A
Vref=0.6V
OVP=(1.25~1.35)*Vref
UVP=(0.7~0.8)*Vref
Fsw=700Khz(Rmode=0)
Fsw=500Khz(Rmode=150K)

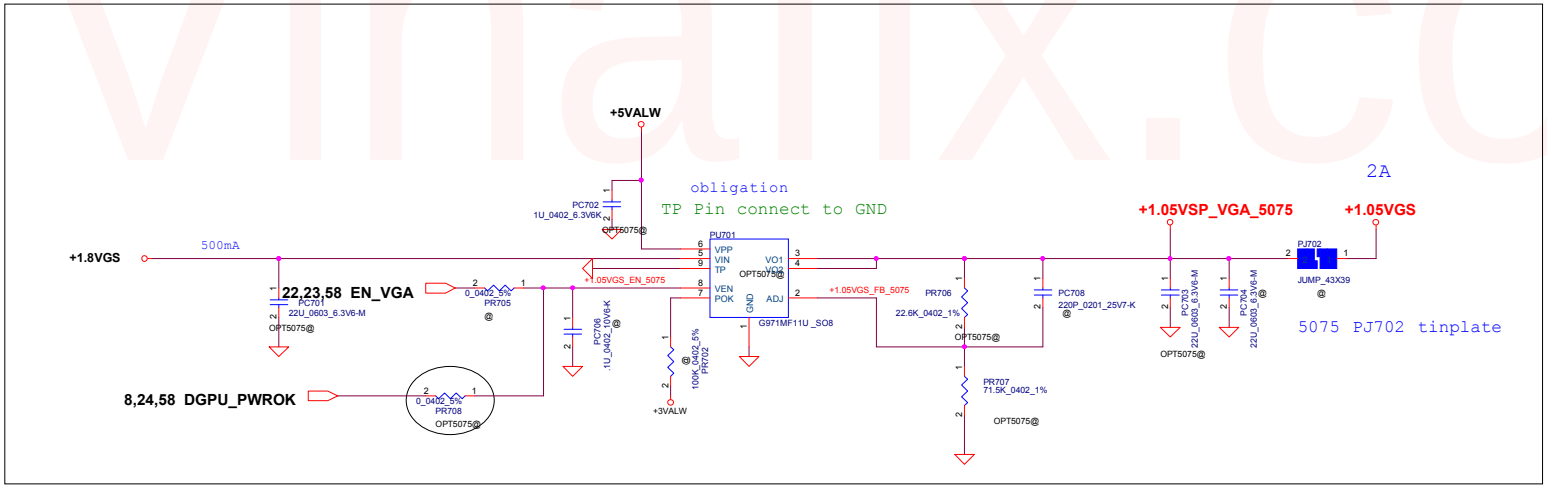

Vinafix.com

Security Classification	LC Future Center Secret Data		
Issued Date	2015/08/20	Deciphered Date	2016/08/20

THIS SHEET OF ENGINEERING DRAWING IS THE PROPRIETARY PROPERTY OF LC FUTURE CENTER, AND CONTAINS CONFIDENTIAL AND TRADE SECRET INFORMATION. THIS SHEET MAY NOT BE TRANSFERED FROM THE CUSTODY OF THE COMPETENT DIVISION OF R&D DEPARTMENT EXCEPT AS AUTHORIZED BY LC FUTURE CENTER NEITHER THIS SHEET NOR THE INFORMATION IT CONTAINS MAY BE USED BY OR DISCLOSED TO ANY THIRD PARTY WITHOUT PRIOR WRITTEN CONSENT OF LC FUTURE CENTER.

Title: PWR-+1.05VGS/+1.35V_VR

Size: C | Document Number: DG421 | Rev: 1.0

Date: Sunday, January 22, 2017 | Sheet 57 of 60

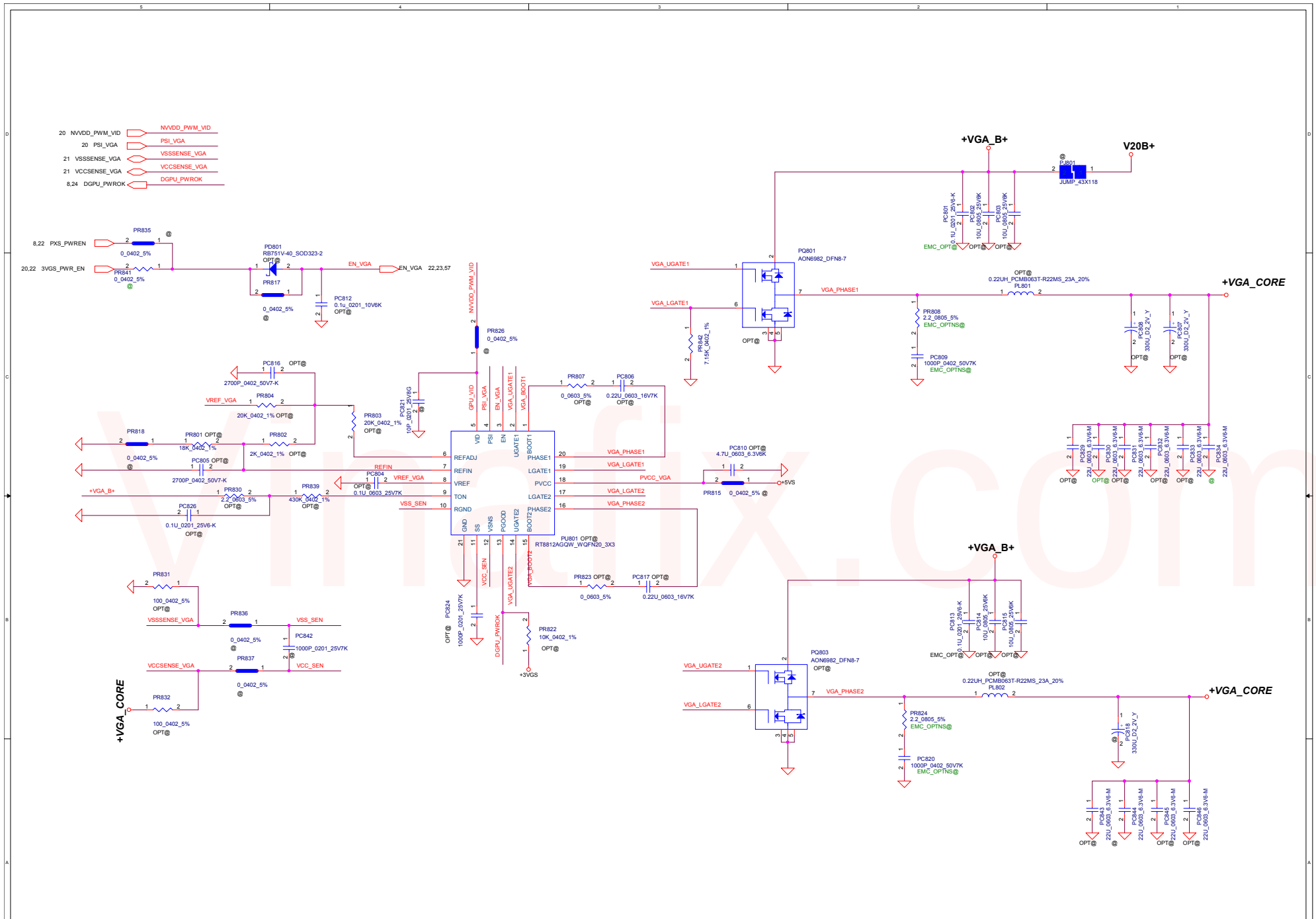

Security Classification	LC Future Center Secret Data		
Issued Date	2015/08/20	Deciphered Date	2016/08/20

THIS SHEET OF ENGINEERING DRAWING IS THE PROPRIETARY PROPERTY OF LC FUTURE CENTER, AND CONTAINS CONFIDENTIAL AND TRADE SECRET INFORMATION. THIS SHEET MAY NOT BE TRANSFERED FROM THE CUSTODY OF THE COMPETENT DIVISION OF R&D DEPARTMENT EXCEPT AS AUTHORIZED BY LC FUTURE CENTER NEITHER THIS SHEET NOR THE INFORMATION IT CONTAINS MAY BE USED BY OR DISCLOSED TO ANY THIRD PARTY WITHOUT PRIOR WRITTEN CONSENT OF LC FUTURE CENTER.

Title: **PWR-VGA_CORE**

Size: C | Document Number: **DG421** | Rev: 1.0

Date: Sunday, January 22, 2017 | Sheet 58 of 60

Vinafix.com

SVID Specification	
	Config
Vmin(V)	0
Vmax(V)	1.52
Vstep(mV)	5

RFsw	Core/GT	SA
14K	600K	600K

RVboot	Core	GT	SA
14K	0V	0V	1.05V

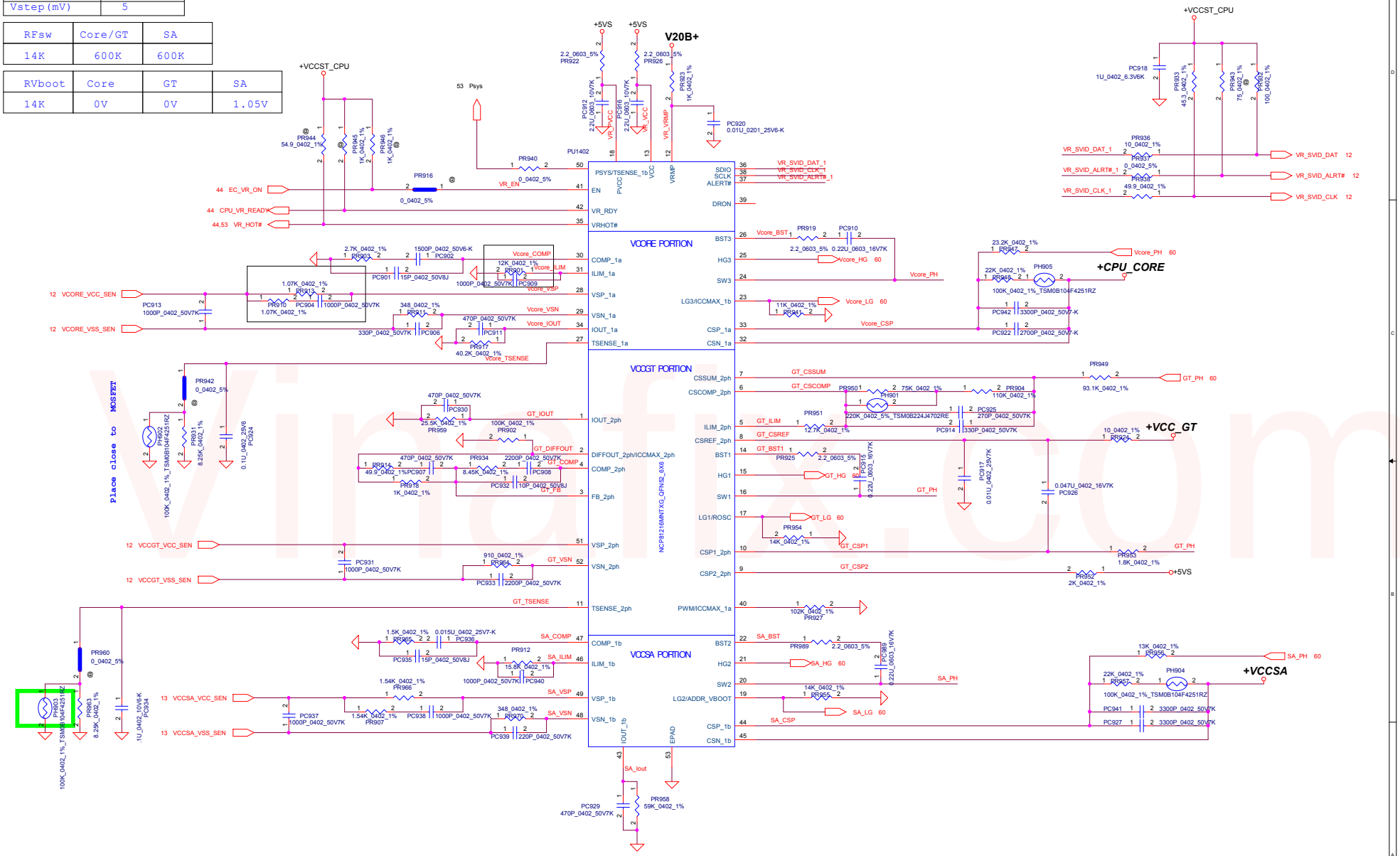

Security Classification	LC Future Center Secret Data		
Issued Date	2015/08/20	Deciphered Date	2016/08/20

THIS SHEET OF ENGINEERING DRAWING IS THE PROPRIETARY PROPERTY OF LC FUTURE CENTER. AND CONTAINS CONFIDENTIAL AND TRADE SECRET INFORMATION. THIS SHEET MAY NOT BE TRANSFERED FROM THE CUSTODY OF THE COMPETENT DIVISION OF R&D DEPARTMENT EXCEPT AS AUTHORIZED BY LC FUTURE CENTER NEITHER THIS SHEET NOR THE INFORMATION IT CONTAINS MAY BE USED BY OR DISCLOSED TO ANY THIRD PARTY WITHOUT PRIOR WRITTEN CONSENT OF LC FUTURE CENTER.

Title: PWR_CPU_CORE1

Size: C | Document Number: DG421 | Rev: 1.0

Date: Sunday, January 22, 2017 | Sheet 59 of 60

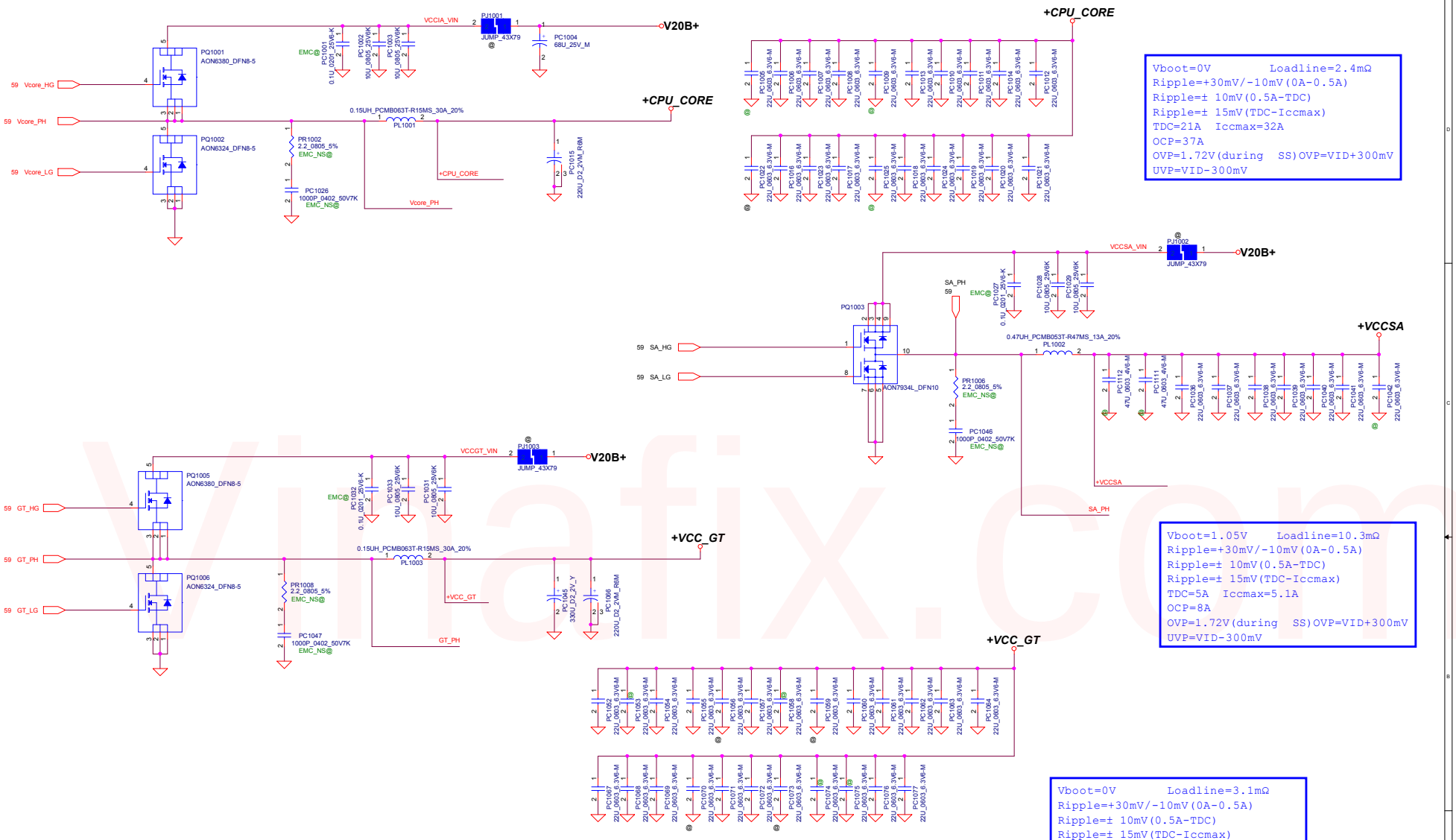

Security Classification	LC Future Center Secret Data		
Issued Date	2015/08/20	Deciphered Date	2016/08/20

THIS SHEET OF ENGINEERING DRAWING IS THE PROPRIETARY PROPERTY OF LC FUTURE CENTER, AND CONTAINS CONFIDENTIAL AND TRADE SECRET INFORMATION. THIS SHEET MAY NOT BE TRANSFERED FROM THE CUSTODY OF THE COMPETENT DIVISION OF R&D DEPARTMENT EXCEPT AS AUTHORIZED BY LC FUTURE CENTER NEITHER THIS SHEET NOR THE INFORMATION IT CONTAINS MAY BE USED BY OR DISCLOSED TO ANY THIRD PARTY WITHOUT PRIOR WRITTEN CONSENT OF LC FUTURE CENTER.

Title: PWR_CPU_CORE2

Size: C | Document Number: DG421 | Rev: 1.0

Date: Sunday, January 22, 2017 | Sheet 60 of 60

Vinafix.com